DGG

BROCHURE / CATALOG >>>>>

https://www.dggpower.com

DGG 登高

DGG 登高

(H)RW11 – 12

DROP-OUT FUSE CUTOUT

OUTDOOR / THREE-PHASE / NON-CERAMIC TYPE



登高电气有限公司
DENGGAO ELECTRIC CO.,LTD.

(H)RW11 OUTDOOR THREE-PHASE DROP-OUT FUSE CUTOUT

1. SUMMARY

(H) RW11-12 (F) outdoor high voltage AC drop fuse (hereinafter referred to as "fuse") is applicable to the outdoor overhead distribution systems with a rated frequency of 50Hz and rated voltage of 10kV. It is used as a protective element of circuit or electrical equipment in case of overload or short circuit fault of a power system.

When traveling normally, the fuse is connected in series in the power line, the fuse is in a tensioned state, and the movable joint is locked. When the line fails, the fault current causes the fuse to blow, the movable joint is released, the fuse tube is quickly dropped, and the circuit is cut off, which plays a role in safety protection for the maintenance of the line and equipment.

The load type fuse is added with elastic contact and arc extinguishing cover on the basis of the ordinary type, which is used to open and close the load current in the power system.

The fuse shall comply with technical standards such as GB / T 15166.3 - 2008 high voltage AC fuses - Part 3: injection fuses, DL / T 640 - 1997 outdoor AC high voltage drop tested fuses and fuse links ordering technical conditions.

2. MODEL AND MEANING

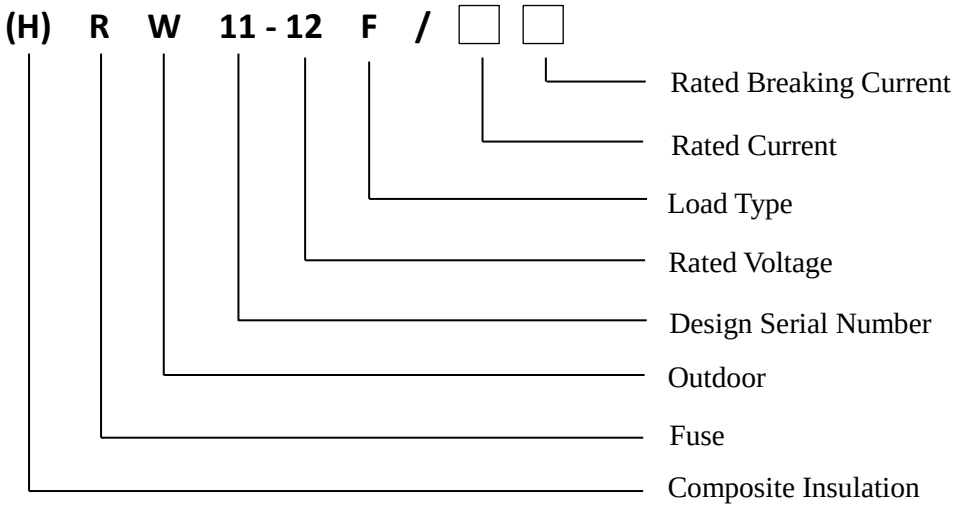

(H)RW11 OUTDOOR THREE-PHASE DROP-OUT FUSE CUTOUT

3. USAGE: ENVIRONMENTAL CONDITIONS

1. Altitude: ≤ 1000 m. If the altitude is higher than 1000m, the rated insulation level shall be corrected accordingly.
2. Ambient air temperature: maximum 40 ℃, minimum - 25 ℃, daily temperature difference 25k
3. Temperature: daily average relative humidity ≤ 95%, monthly average relative humidity ≤ 90%
4. Solar auxiliary radiation intensity: 0.1W/cm2
5. Icing thickness: not more than 10mm
6. Earthquake resistance: horizontal acceleration 0.3g
7. Outdoor Wind speed (Wind pressure): 35m/s (700Pa)
8. Pollution level: not more than d-level

4. MAIN ADVANTAGES

1. The insulator adopts high-strength porcelain or imported silicone rubber insulation material with excellent insulation performance;
2. The fuse tube is made of epoxy phenolic glass cloth tube with fiber lining with anti-ultraviolet special coating, which has excellent anti-ultraviolet performance
3. The rated current of the same family of fuses is large, up to 200A, and the breaking capacity is strong, up to 16kA.

(H)RW11 OUTDOOR THREE-PHASE DROP-OUT FUSE CUTOUT

5. TECHNICAL PARAMETER TABLE

No.	Item		Unit	Parameters	
1	Rated Frequency		Hz	50 / 60	
2	Rated Voltage		kV	12	
3	Rated Current for Fuse of the same family		A	≤ 100	≤ 200
4	Rated Breaking Current		kA	12.5	16
5	Rated Short-time Power Frequency Withstand Voltage	To Earth (Dry)	kV / min	42 / 1	
		Fracture (Dry)		49 / 1	
		To Earth (Wet)		30 / 1	
		Fracture (Wet)		36 / 1	
6	Lightning Impulse Withstand Voltage	To Earth	kV	75	
		Fracture		85	
7	Creepage Distance		mm	Not less than 300 (e-level)	
8	Mechanical Life		Times	500	
9	Usage Life Span		Years	Not less than 20	
If the altitude is over 1000m, the rated insulation level should be modified as appropriate					

Note: If the parameters requested by the user are beyond the scope of the above table, they can be determined after consultation with our company.

(H)RW11 OUTDOOR THREE-PHASE DROP-OUT FUSE CUTOUT

6. OUTLINE AND INSTALLATION DIMENSIONS

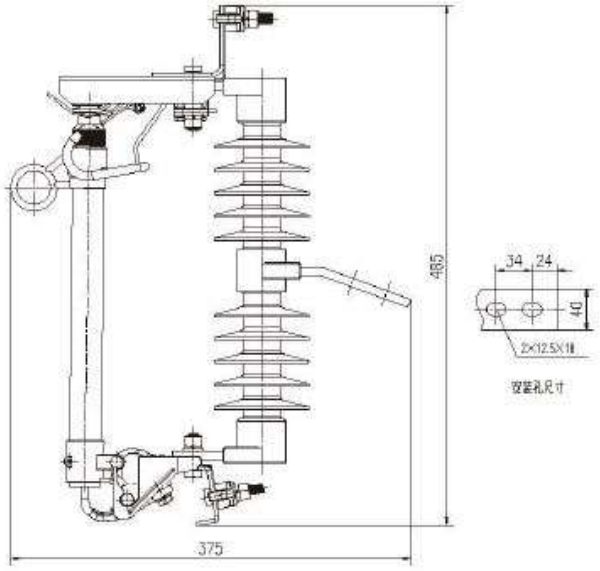

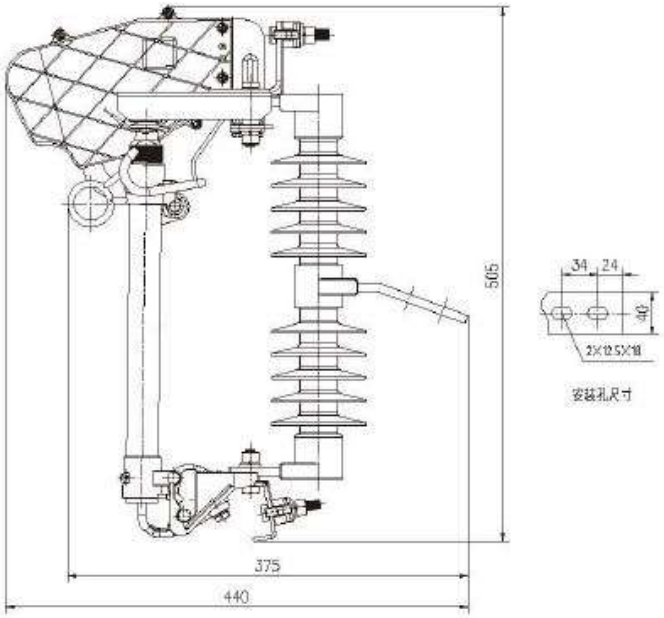

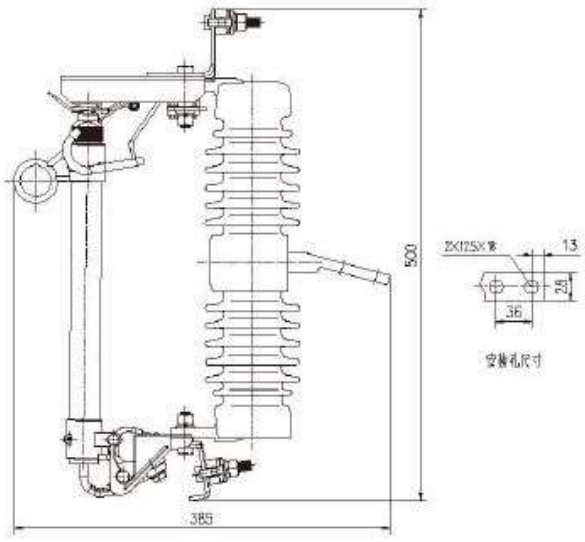

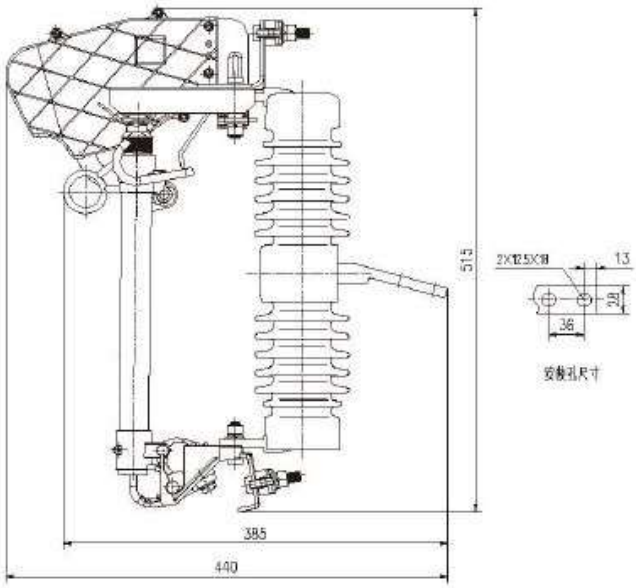

© DENGGAO ELECTRIC CO. LTD; ALL RIGHTS RESERVED

登高电气有限公司
DENGGAO ELECTRIC CO.,LTD.
HEADQUATERS: NO. 208 WEI WU ROAD, ECONOMIC DEVELOPMENT ZONE, YUEQING-WENZHOU, ZHEJIANG-CHINA
PHONE NUMBER: 0577 – 57576678
EMAIL ADDRESS: sale@dggpower.com

DGG 登高