DGG

BROCHURE / CATALOG >>>>>

https://www.dggpower.com

DGG 登高

DGG 登高

GN22 – 1.5 / 3150A

ISOLATION SWITCH / DISCONNECTOR

INDOOR / THREE-PHASE / HIGH-VOLTAGE

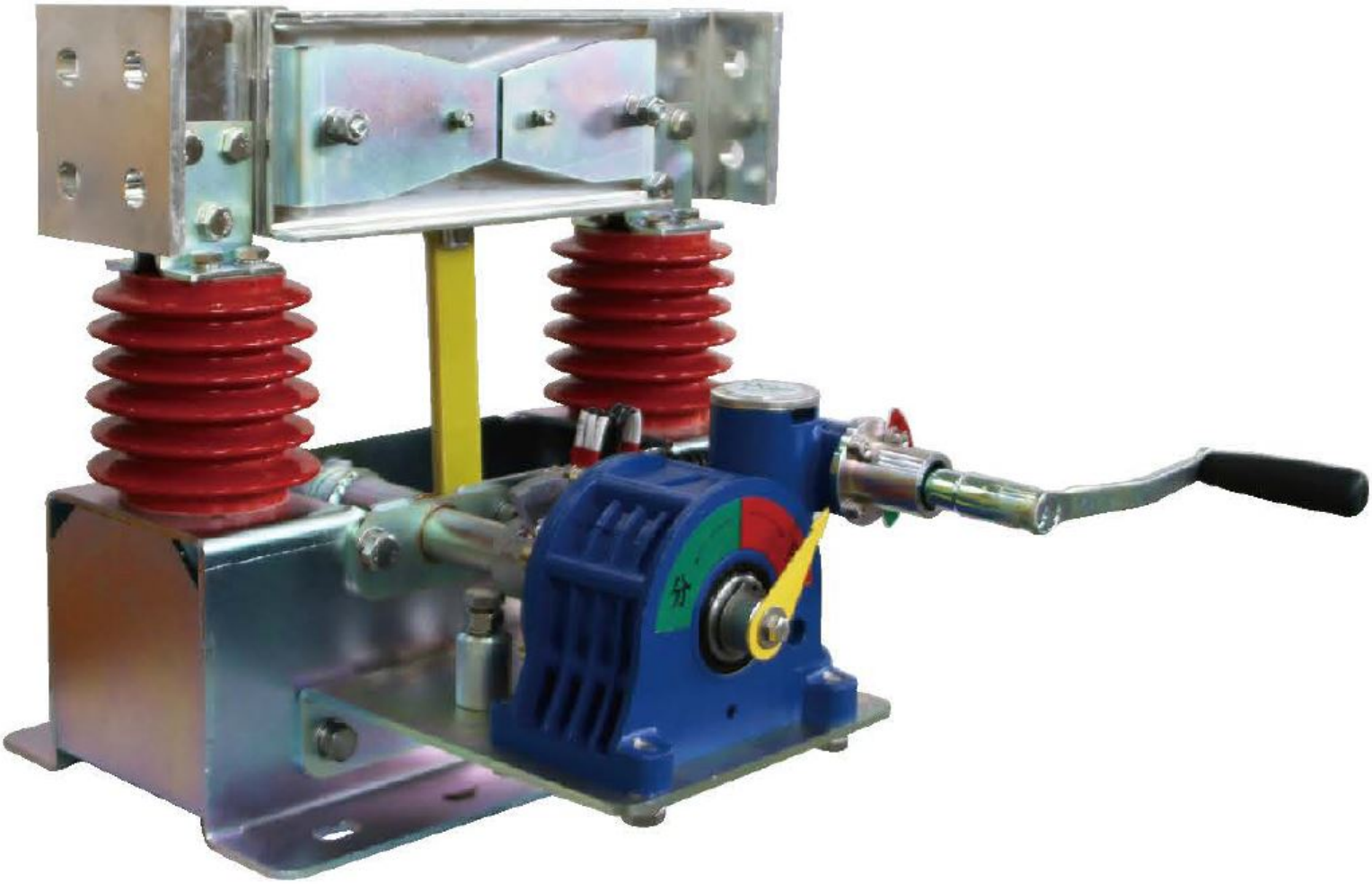

登高电气有限公司
DENGGAO ELECTRIC CO.,LTD.

GN22 – 1.5 OUTDOOR DOOR ISOLATION SWITCH / DISCONNECTOR

1. SUMMARY

GN22-1.5 series indoor single-phase DC disconnector

The GN22-1.5kV/3150A disconnector is a large current indoor high-voltage disconnector, which is applicable to the rated voltage of DC1.5kV and is used as the opening and closing circuit with voltage and without load in the power system. It adopts a two-step locking mode, so that the dynamic and thermal stability of the switch is excellent and the operating force is small. New material processes such as epoxy resin, insulator and tin or silver plating are adopted to make the switch conductive, small in size and light in weight. Its outlet terminal is convenient for connection with vacuum circuit breaker, oil circuit breaker and busbar, which can reduce the volume of switch cabinet, reduce the over-current connector and reduce the cost.

2. MODEL AND MEANING

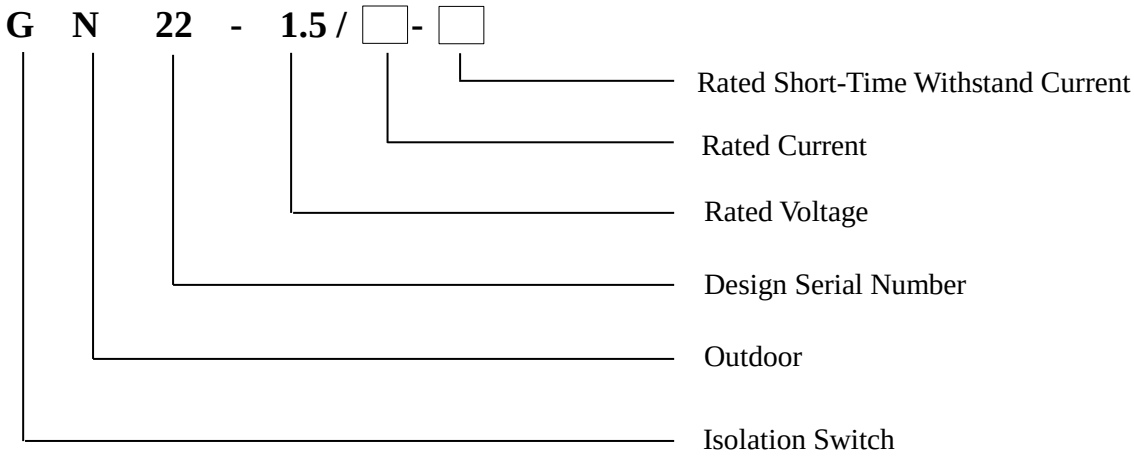

3. USAGE: ENVIRONMENTAL CONDITIONS

1. The altitude does not exceed 1000m.
2. The ambient air temperature: Maximum:+40 ℃; Minimum:-30 ℃, Paramus:-40 ℃
3. The wind pressure does not exceed 700Pa. (corresponding to 34m/s wind speed).
4. Atmospheric relative humidity: Daily average does not exceed 95%, Monthly average does not exceed 90%
5. Pollution-proof type isolator is applied to severe filthy conduction areas; however, it shouldn't be any explosive matters and matters causing a fire.

GN22 – 1.5 OUTDOOR DOOR ISOLATION SWITCH / DISCONNECTOR

4. TECHNICAL PARAMETER TABLE

NO.	ITEM	UNIT	DATA
1	Remote Voltage	kV DC	1.5
2	Rated voltage	kV	1.8
3	Rated current	kA	2.6 / 4
4	Rated Short-time Withstand Current		95
5	Rated Peak Withstand Current		135
6	1 min Power Frequency Withstand Voltage (Phase, To earth)	kV	3
7	1 min Power Frequency Withstand Voltage		9.2
8	Rated Lightning Impulse Withstand Voltage		20
9	Mechanical Life	Times	2000
10	Rated Operating Voltage	V	DC24/48/110/220
Note: If the altitude is over 1000m, the rated insulation level should be modified as appropriate.			

GN22 – 1.5 OUTDOOR DOOR ISOLATION SWITCH / DISCONNECTOR

5. OUTLINE AND INSTALLATION DIMENSION

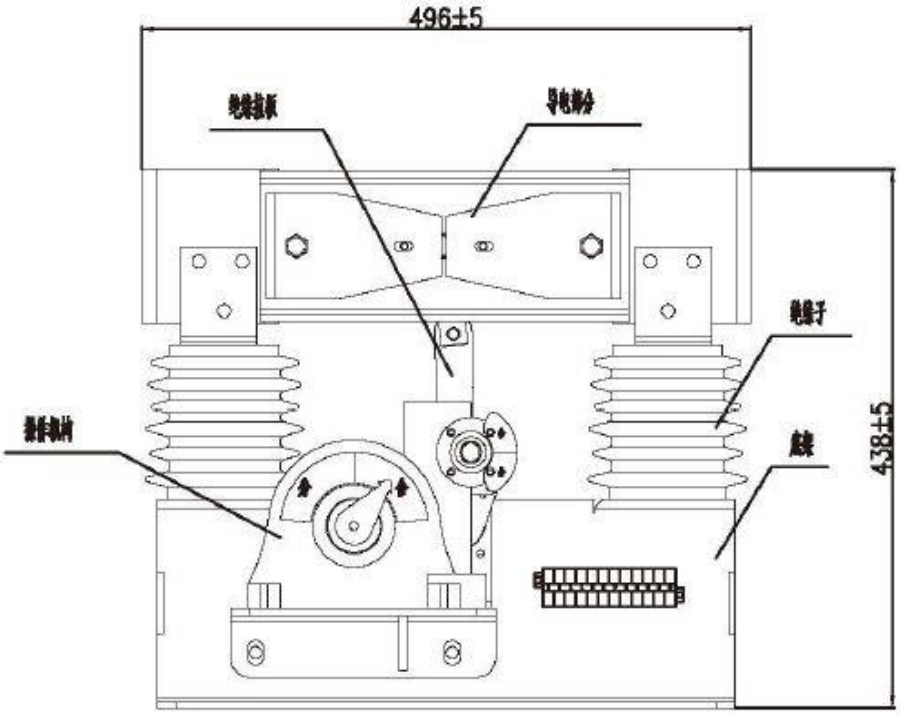

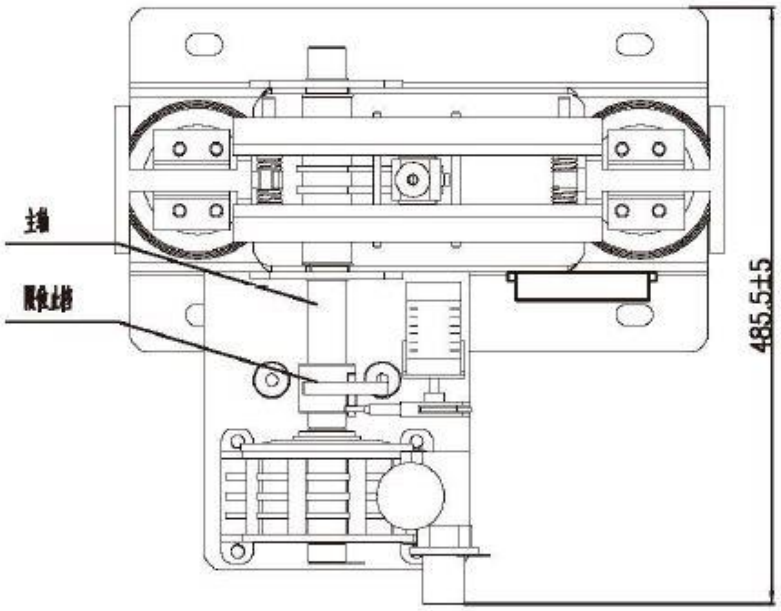

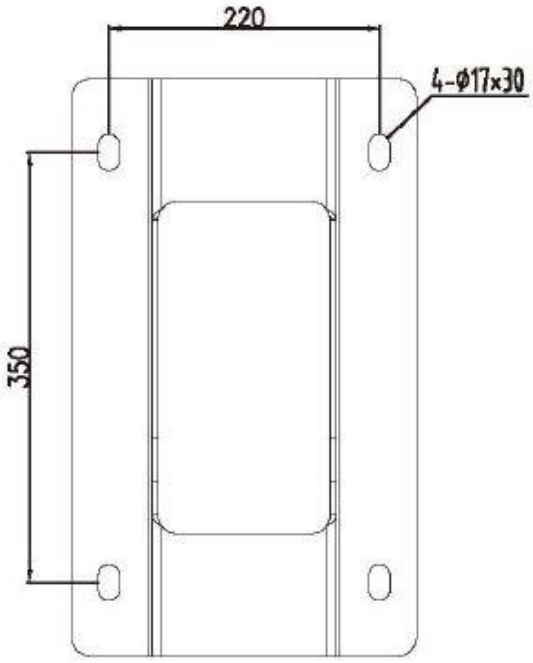

GN22 – 1.5 OUTDOOR DOOR ISOLATION SWITCH / DISCONNECTOR

6. OUTLINE AND INSTALLATION DIMENSION

附图2 3150A 接线板安装孔

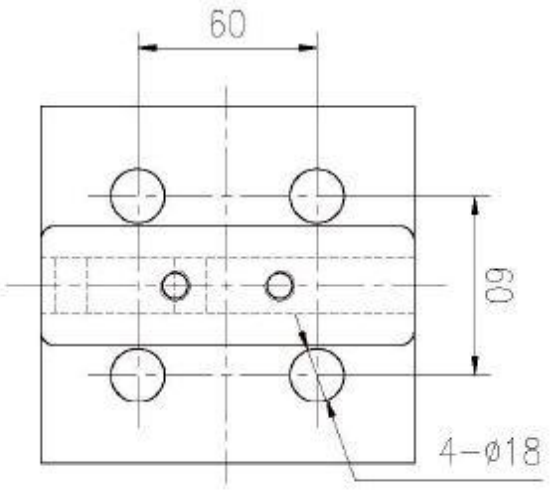

附图3 底架安装孔

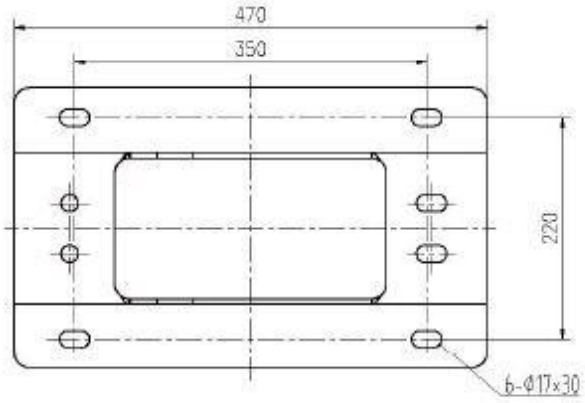

附图4 接线端子

接线端子(JX)

DL-1	DL-2	DL-3	DL-4	DL-5	DL-6	DL-7	DL-8	DL-9	DL-10	DL-11	DL-12
1	2	3	4	5	6	7	8	9	10	11	12

辅助开关(DL)

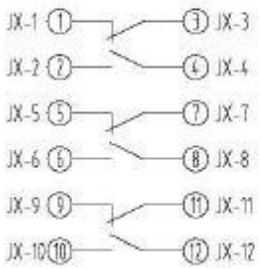

开关处于合闸位置

© DENGGAO ELECTRIC CO. LTD; ALL RIGHTS RESERVED

登高电气有限公司
DENGGAO ELECTRIC CO.,LTD.
HEADQUATERS: NO. 208 WEI WU ROAD, ECONOMIC DEVELOPMENT ZONE, YUEQING-WENZHOU, ZHEJIANG-CHINA
PHONE NUMBER: 0577 – 57576678
EMAIL ADDRESS: sale@dggpower.com

DGG 登高