DGG

BROCHURE / CATALOG >>>>>

https://www.dggpower.com

DGG 登高

DGG 登高

GN30 – 12(630)

ISOLATION SWITCH / DISCONNECTOR

INDOOR / THREE-PHASE / HIGH-VOLTAGE

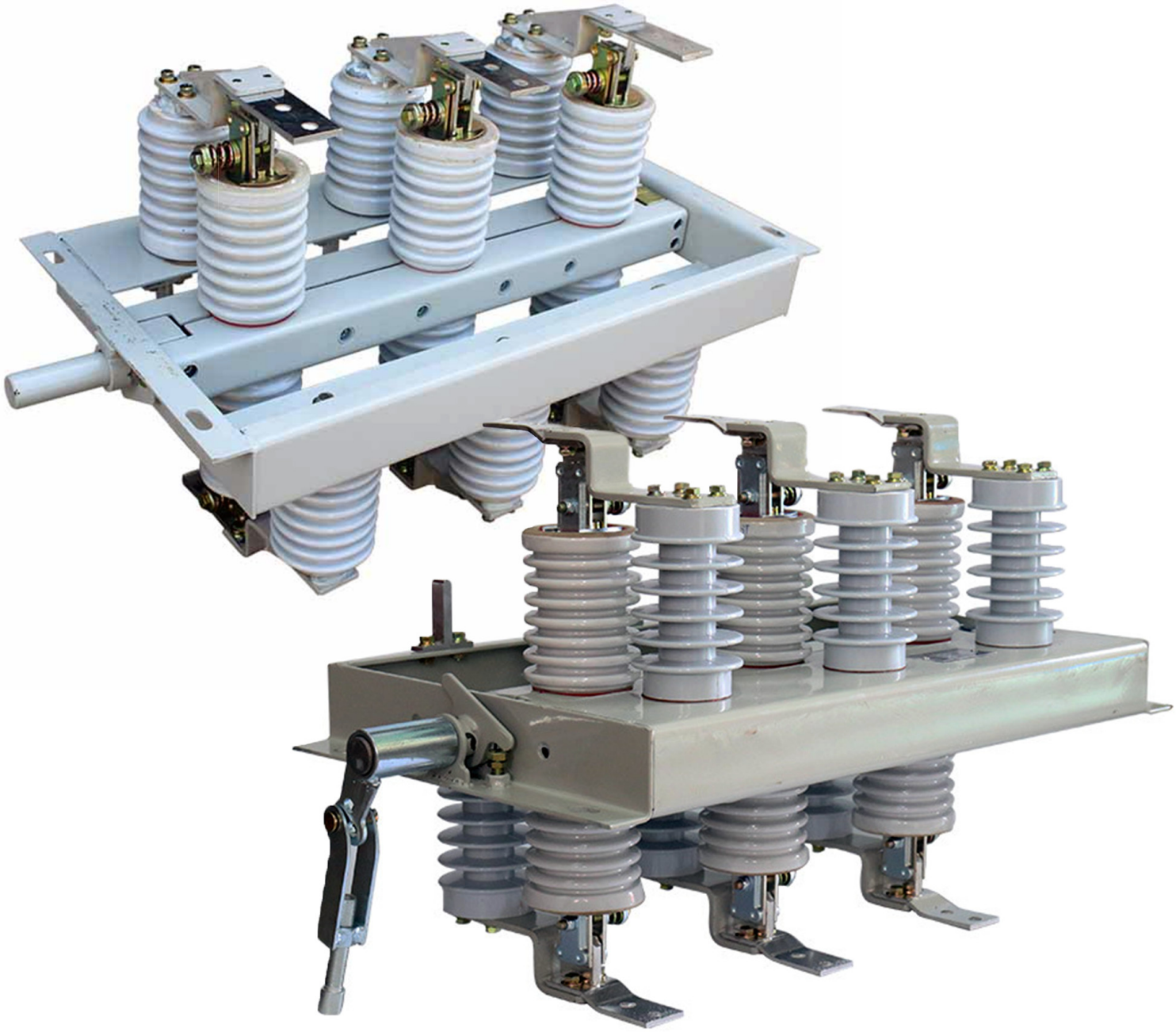

登高电气有限公司
DENGGAO ELECTRIC CO.,LTD.

GN30 – 12 INDOOR ISOLATION SWITCH / DISCONNECTOR

1. SUMMARY

This product is designed to be compact, small in space, strong in insulation capacity, and easy to install and adjust. Its performance meets the requirements of High Voltage AC Disconnectors and Earthing Switches (GB1985-2004). It is applicable to indoor power systems with three-phase AC 50Hz, rated voltage 10V AC 50Hz and below. It is used for opening and closing circuits under voltage and no load. It can be used together with the high-voltage switch cabinet or separately.

2. MODEL AND MEANING

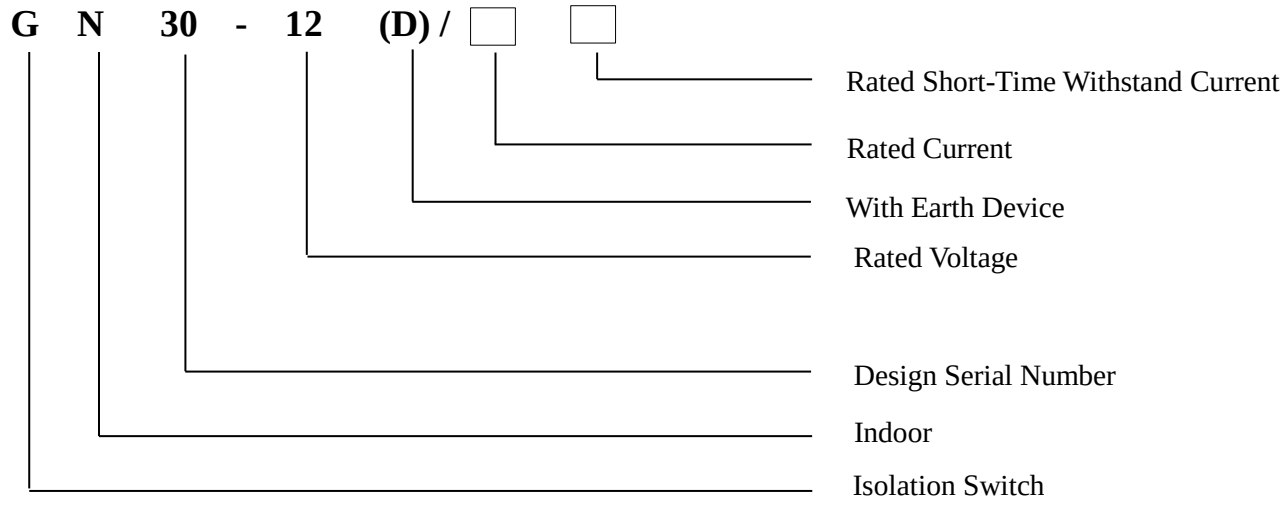

3. USAGE: ENVIRONMENTAL CONDITIONS

1. Altitude: Not more than 2000m
2. Ambient air temperature: maximum +40 ℃, minimum - 10 ℃, daily temperature difference 25K
3. Humidity: daily average relative humidity ≤ 95%, monthly average relative humidity ≤ 90%
4. Places without serious dust, chemical corrosion and explosive substances
5. Places without frequent severe vibration.

GN30 – 12 INDOOR ISOLATION SWITCH / DISCONNECTOR

4. STRUCTURE INTRODUCTION

This product is a new type of rotary contact disconnector. Its main structure is to fix two groups of insulators and contacts on the upper and lower planes of the three-phase common low frame. Through the rotary contact, the switch can be closed and opened.

This switch is an open type with grounding knife added to the GN3010 switch, which can meet the requirements of different power systems

5. TECHNICAL PARAMETER TABLE

No.	Item		Unit	Parameters							
1	Rated Frequency		Hz	50 / 60							
2	Rated Voltage		kV	12							
3	Rated Current		A	630		1000 1250		2000 2500		3150	
4	Rated Short-Time Withstand Current		kA	20	25	25	31.5	31.5	40	31.5	40
5	Rated Short-Time Withstand Current (Peak Value)		kA	50	63	63	80	80	160	80	100
6	Power Frequency Withstand Voltage	To Earth	kV	95 / 1							
		Fracture		118 / 1							
7	Rated Lightning Impulse Withstand Voltage	To Earth		185							
		Fracture		215							
8	Rated Short-Circuit Continuous Time (Main force / Ground force)		s	4 (Isolation Switch), 2 (To Earth Switch)							
11	Mechanical Life		Times	2000							
12	Creepage distance		mm	300 ~ 380							
If the altitude is over 1000m, the rated insulation level should be modified as appropriate											

GN30 – 12　INDOOR ISOLATION SWITCH / DISCONNECTOR

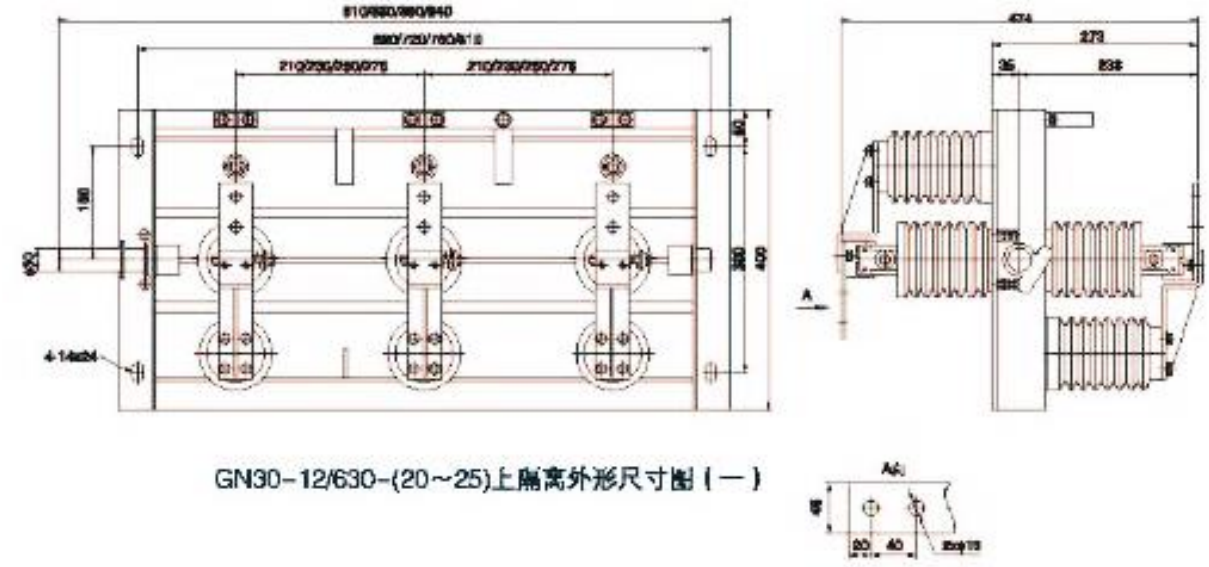

GN30-12/630-(20~25)上隔离外形尺寸图（一）

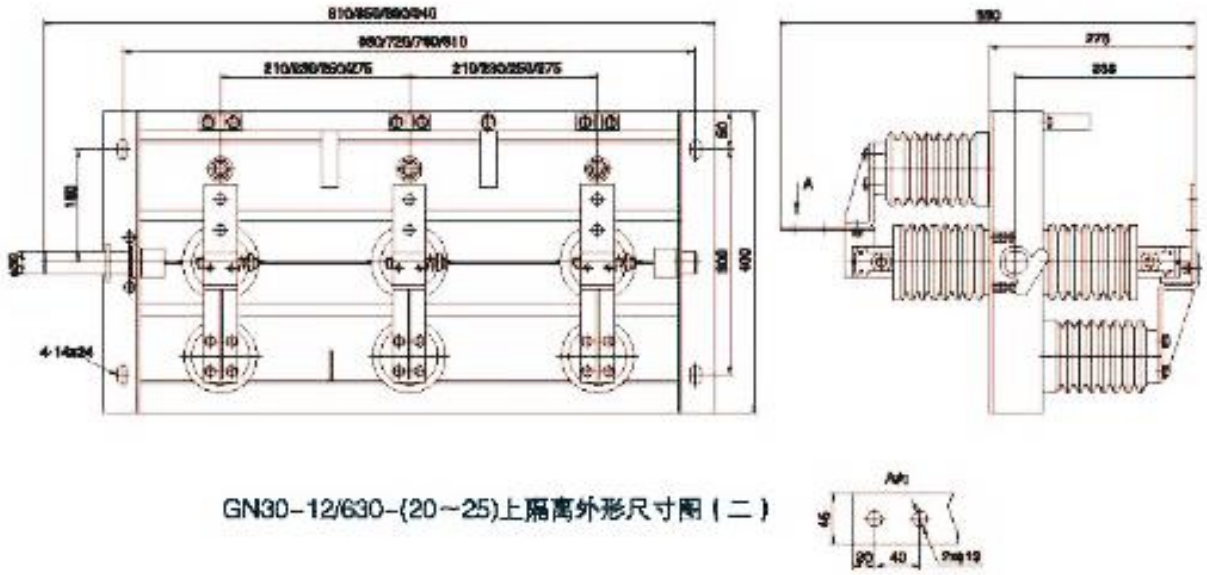

GN30-12/630-(20~25)上隔离外形尺寸图（二）

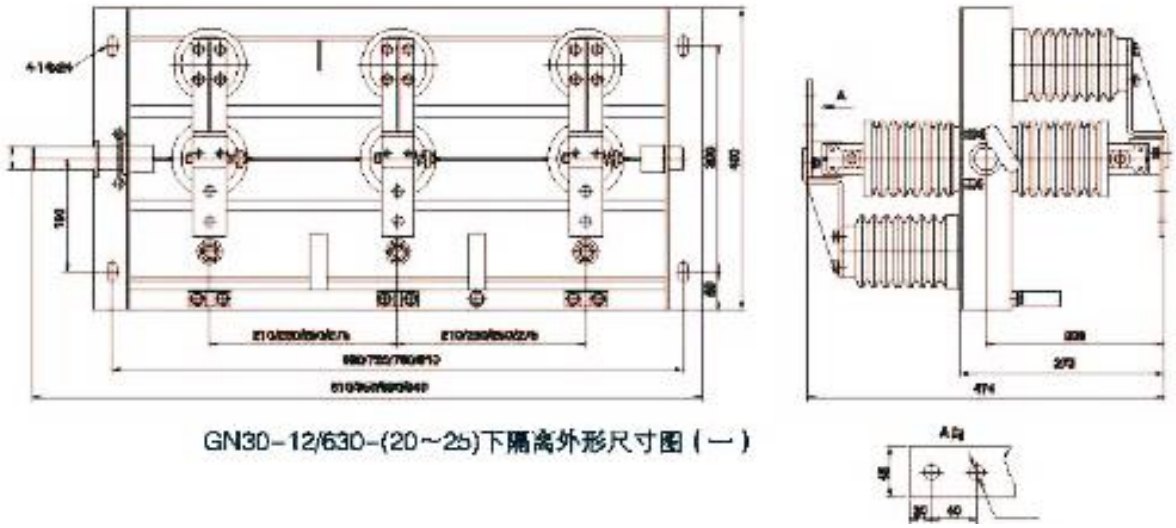

GN30-12/630-(20~25)下隔离外形尺寸图（一）

GN30 – 12 INDOOR ISOLATION SWITCH / DISCONNECTOR

6. OUTLINE AND INSTALLATION DIMENSION

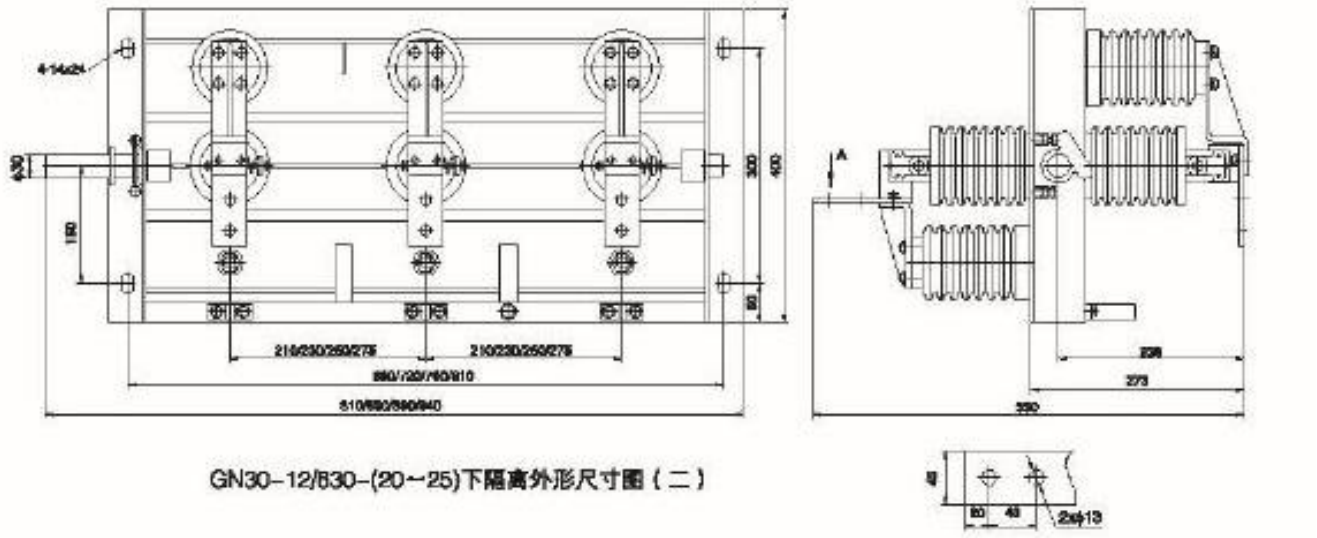

GN30-12/630-(20~25)下隔离外形尺寸图（二）

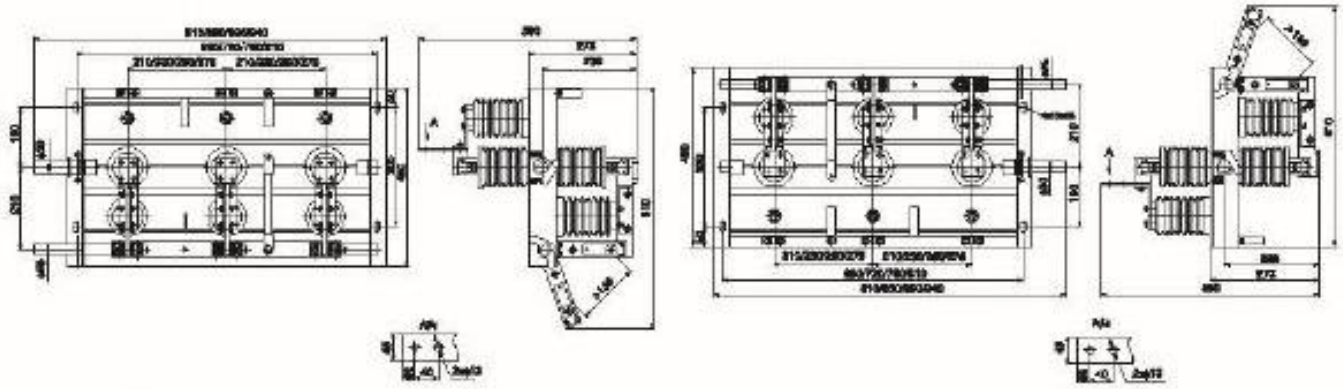

GN30-12D/630-(20~25)上隔离外形尺寸图（一）

GN30-12D/630-(20~25)上隔离外形尺寸图（二）

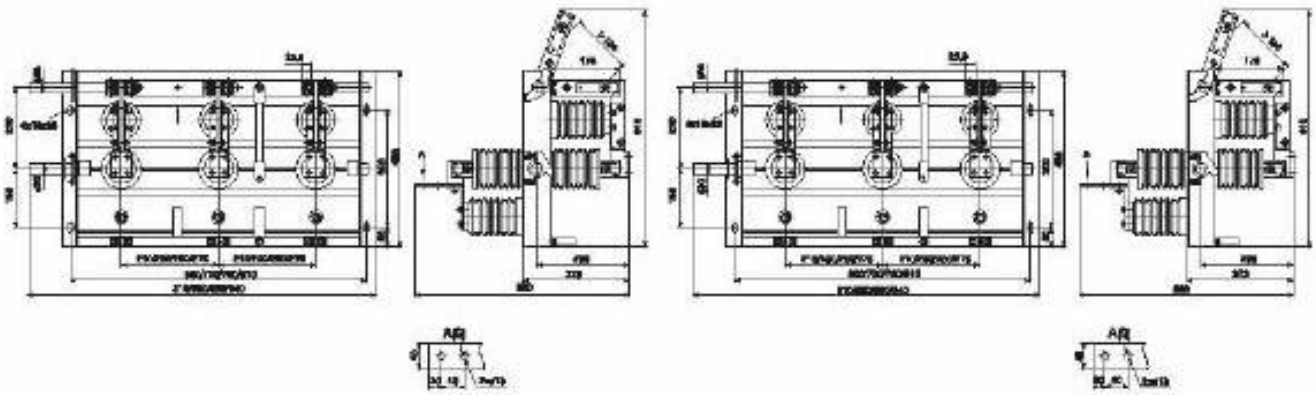

GN30-12D/630-(20~25)下隔离外形尺寸图（一）

GN30-12D/630-(20~25)下隔离外形尺寸图（二）

GN30 – 12　INDOOR ISOLATION SWITCH / DISCONNECTOR

相距P / 各项尺寸 / 型号	275						250						230/210						备注
	A	B	C	D	E	F	A	B	C	D	E	F	A	B	C	D	E	F	
GN30–12/630–(20～25)	760	300	282 平行进线 363 垂直进线	510 两个平行 575 一个垂直 655 二个垂直	400	870	760	300	282 平行进线 363 垂直进线	510 两个平行 575 一个垂直 655 二个垂直	400	900	680	300	282 平行进线 363 垂直进线	510 两个平行 575 一个垂直 655 二个垂直	400	810	安装孔尺寸 4–14×24 1.隔离刀断开距离 ≥125; 高原型 ≥160;
GN30–12/1000–(25～31.5)																			
GN30–12/1250–(25～31.5)																			
GN30–12D/630–(20～25)					450 打开地刀为 605						450 打开地刀为 605						450 打开地刀为 605		
GN30–12D/1000–(25～31.5)																			
GN30–12D/1250–(25～31.5)																			
GN30–12G/630–(20～25)			上述尺寸 C+30	上述尺寸 C+60	450				上述尺寸 C+30 上述尺寸 C+60		450								
GN30–12G/1000–(25～31.5)																			
GN30–12G/1250–(25～31.5)																			
GN30–12DG/630–(20～25)					450 打开地刀为 660						450 打开地刀为 660								
GN30–12DG/1000–(25～31.5)																			
GN30–12DG/1250–(25～31.5)																			
GN30–12/2000–(25～40)	810		375	600	515	978 两端轴头			375	600	515	978 两端轴头							安装孔尺寸 4–14×24
GN30–12/3150–(31.5～40)																			
GN30–12D/2000–(25～40)					≯700 打开						≯700 打开								
GN30–12D/3150–(31.5～40)																			

© DENGGAO ELECTRIC CO. LTD; ALL RIGHTS RESERVED

登高电气有限公司
DENGGAO ELECTRIC CO.,LTD.
HEADQUATERS: NO. 208 WEI WU ROAD, ECONOMIC DEVELOPMENT ZONE, YUEQING-WENZHOU, ZHEJIANG-CHINA
PHONE NUMBER: 0577 – 57576678
EMAIL ADDRESS: sale@dggpower.com

DGG 登高