# DGG

**BROCHURE / CATALOG** >>>>>

https://www.dggpower.com

DGG 登高

DGG 登高

# HXGN – 12

## GAS INSULATED RING NETWORK SWITCHGEAR CABINET

### INDOOR / THREE-PHASE / HIGH VOLTAGE





# HXGN GAS INSUALTED RING NETWORK SWITCHGEAR CABINET

## 1. SUMMARY

HXGN - 12 box type fixed AC metal-enclosed ring network switchgear (hereinafter referred to as "ring network cabinet/switchgear") is suitable for power distribution systems in areas such as industrial and mining enterprises, residential areas, high-rise buildings, schools, and parks. It is used as an indoor AC three-phase 12kV, 50Hz ring network power supply unit and terminal power distribution equipment. It can disconnect or close the rated load current and transformer no-load current and can disconnect or close the overhead line, cable line, or capacitive current at a certain distance. The load switch fuse combination cabinet can disconnect the rated short-circuit current at one time. In the power system, as the protection of distribution equipment and the distribution and control of electric energy, it has a perfect "five prevention" locking function.

The switchgear complies with the requirements of national standard GB3906 (3-35kv AC metal-enclosed switchgear), GB /T11022 (common technical requirements for standards of high voltage switchgear and control equipment), National Standard IEC 60298 (AC metal-enclosed switchgear and control equipment with rated voltage above 1kV and below 52kV), and IEC 60694 (common terms for high voltage switchgear and control equipment).

HXGN œ - 12 ring network structure is composed of 8MF steel locally welded and bolted. It is mainly equipped with an fln36 sulfur HEXAOXIDE load switch and FZN12 / FZN21 / FZN25 two-position vacuum load switch. The load switch and fuse with the impactor are used as combined appliances. The ring main cabinet can be flexibly equipped with CT, Pt, and ZnO arresters. A removable movable cover plate is installed at the bottom of the cabinet to facilitate cable incoming. For overhead incoming lines, another bus channel can be installed according to the user's requirements.

# HXGN GAS INSUALTED RING NETWORK SWITCHGEAR CABINET

## 2. MODEL AND MEANING

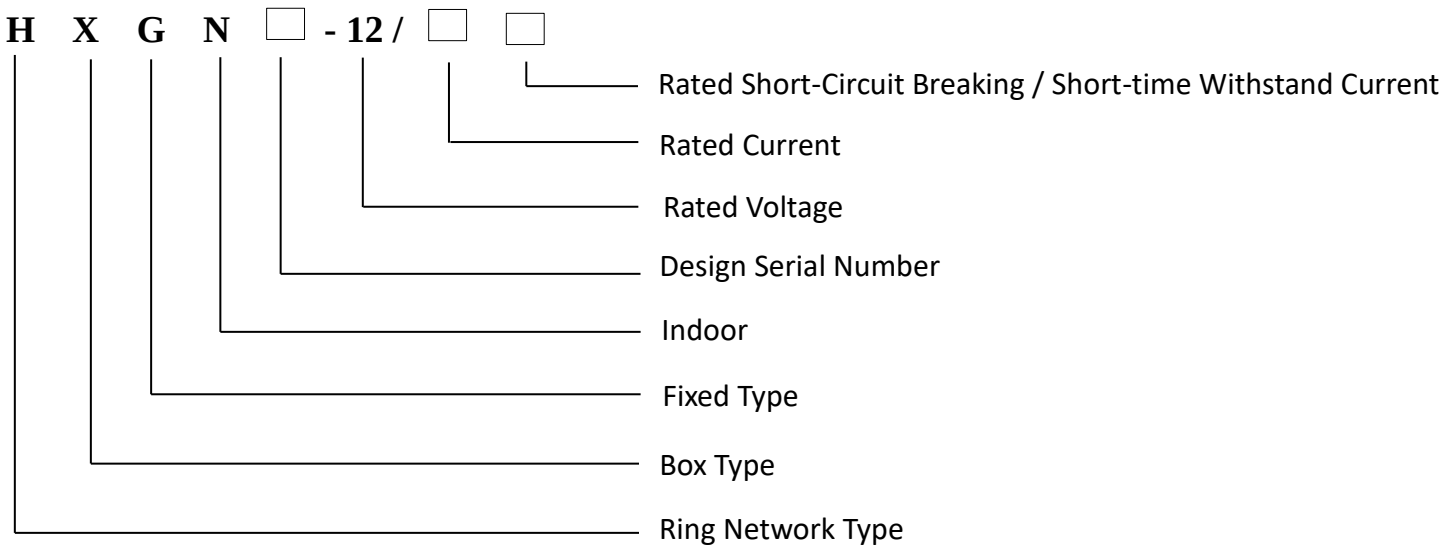


## 3. NORMAL USAGE CONDITIONS

1. The altitude shall not exceed 1000 meters, and the altitude under special use conditions shall not exceed 2000 meters
2. Ambient Temp: Upper limit +40˚C, the average value measured within 24h shall not exceed 35˚C, and the lowest ambient air temp -15˚C
3. Relative humidity:
   The Ave. value of relative humidity measured within 24h shall not exceed 95%
   The average value of water vapor pressure measured within 24h shall not exceed 2.2kpa
   The average monthly relative temperature shall not exceed 90%
   The average monthly water vapor pressure shall not exceed 1.8kpa
4. The surrounding air is not appreciably polluted by dust, smoke, corrosive and/or flammable gases, vapors, or salt mist.
5. When the equipment is installed, the inclination from the vertical plane should not exceed 5˚C.
6. The equipment should be installed in a place free from severe pulling and impact.
7. Note: Users can negotiate with our company for special requirements.

## 4. TECHNICAL PARAMETER TABLE

| No. | Item | | Unit | Parameters |
|---|---|---|---|---|
| 1 | Rated voltage | | kV | 7.2 / 12 |
| 2 | Rated Current of Main Bus | | A | 630 |
| 3 | Rated Current | Incoming Cabinet | A | 630 |
| | | Outgoing Cabinet (Combined Electrical Cabinet) | A | 125 (Biggest) |
| 4 | Rated Short-Time Withstand Current | | kA | 20 |
| 5 | Rated Peak Withstand Current | | kA | 31.5 |
| 6 | Rated Short-Time Making Current (Peak Value) | | kA | 50 |
| 7 | Rated Active Load Breaking Current | | A | 630 |
| 8 | Rated Closed-Loop Breaking Current | | A | 630 |
| 9 | Rated Cable Charging Current | | A | 10 |
| 10 | Rated Short-Time Withstand Current of Earthing Switch | | kA | 20 |
| 11 | Rated Peak Withstand Current of Earthing Switch | | kA | 50 |
| 12 | Rated Short-Time Making Current Making Peak Value of Earthing Switch. | | kA | 50 |
| 13 | Rated Breaking Current of Cable Point | | A | 3150 |
| 14 | 1min Power Frequency Withstand Voltage | Phase-Phase Vacuum Fracture | kV | 42 |
| | | Isolation Fracture | | 48 |
| 15 | Lightning Impulse Withstand Voltage | Phase-Phase Vacuum Fracture | kV | 75 |
| | | Isolation Fracture | | 85 |
| 16 | Mechanical Life Span | Vacuum Load Switch | Times | 10000 |
| | | Isolation knife Earth Knife | | 2000 |
| 17 | Load Switch | Average Closing Speed | m/s | 0.6±0.2 |
| | | Average Opening Speed | | 1.1±0.2 |
| | | 3-Phase Asynchrony | | ≤2 |
| 18 | Fuse for the Combined Appliance | Maximum Rated Current | A | 125 |
| | | Rated Short-Circuit Breaking Current | kA | 31.5 |
| 19 | Protection Level | | | IP3X |

# HXGN GAS INSUALTED RING NETWORK SWITCHGEAR CABINET

## 5. OUTLINE AND INSTALLATION DIMENSION

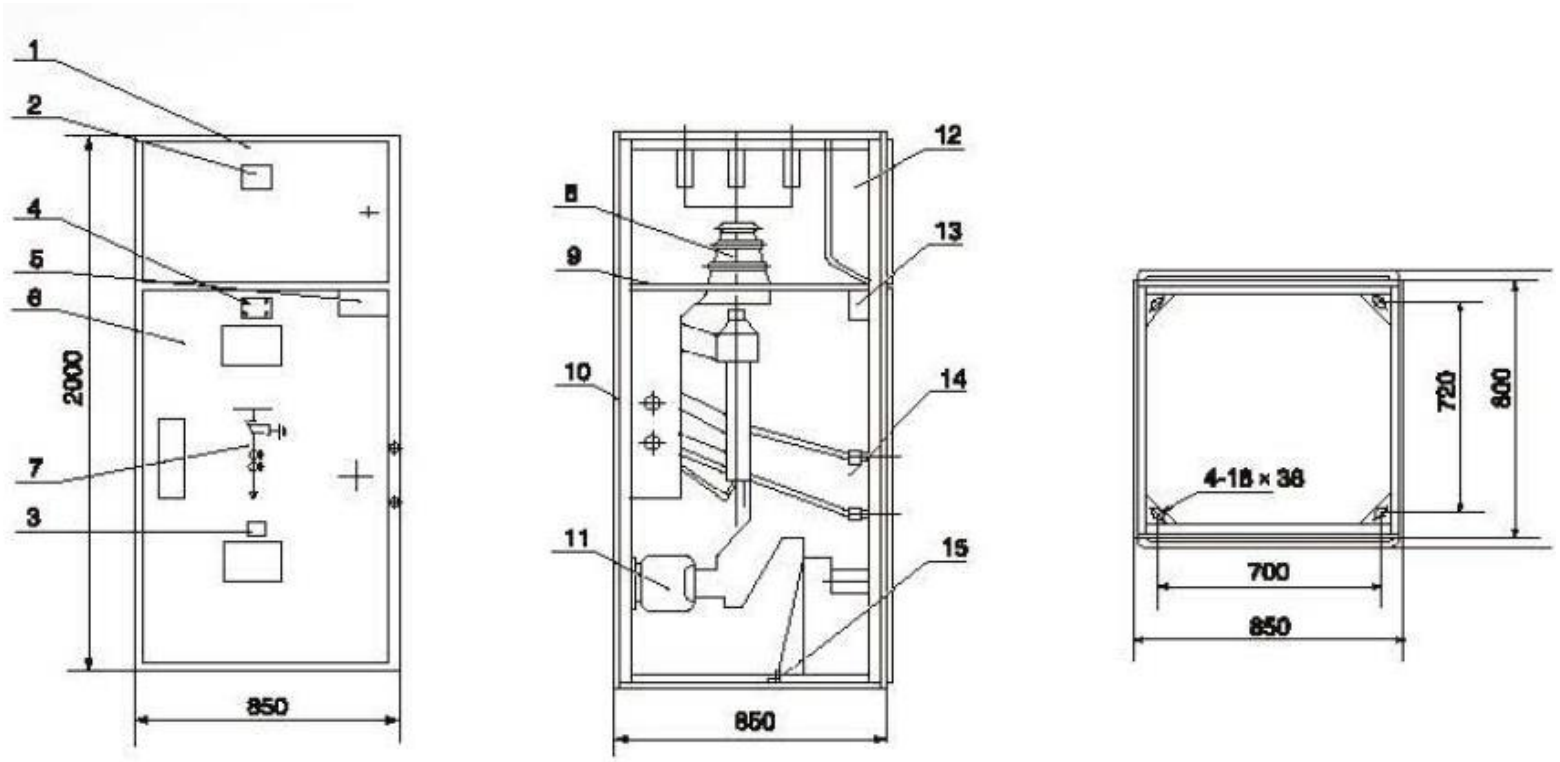


1. Instrument Door
2. Instrument
3. DXN Monitor
4. Nameplate
5. Operation Mechanism
6. Front Lower Door
7. Simulation Card
8. Load Switch
9. Middle Partition
10. Frame
11. Current Transformer
12. Relay
13. Lightning
14. Operation Mechanism
15. Cable Support

© DENGGAO ELECTRIC CO. LTD; ALL RIGHTS RESERVED

登高电气有限公司
DENGGAO ELECTRIC CO.,LTD.
HEADQUATERS: NO. 208 WEI WU ROAD, ECONOMIC DEVELOPMENT ZONE, YUEQING-WENZHOU, ZHEJIANG-CHINA
PHONE NUMBER: 0577 – 57576678
EMAIL ADDRESS: sale@dggpower.com

DGG 登高