DGG

BROCHURE / CATALOG >>>>>

https://www.dggpower.com

DGG 登高

DGG 登高

LW8 – 40.5

SF6 CIRCUIT BREAKER

OUTDOOR / THREE-PHASE / HIGH-VOLTAGE

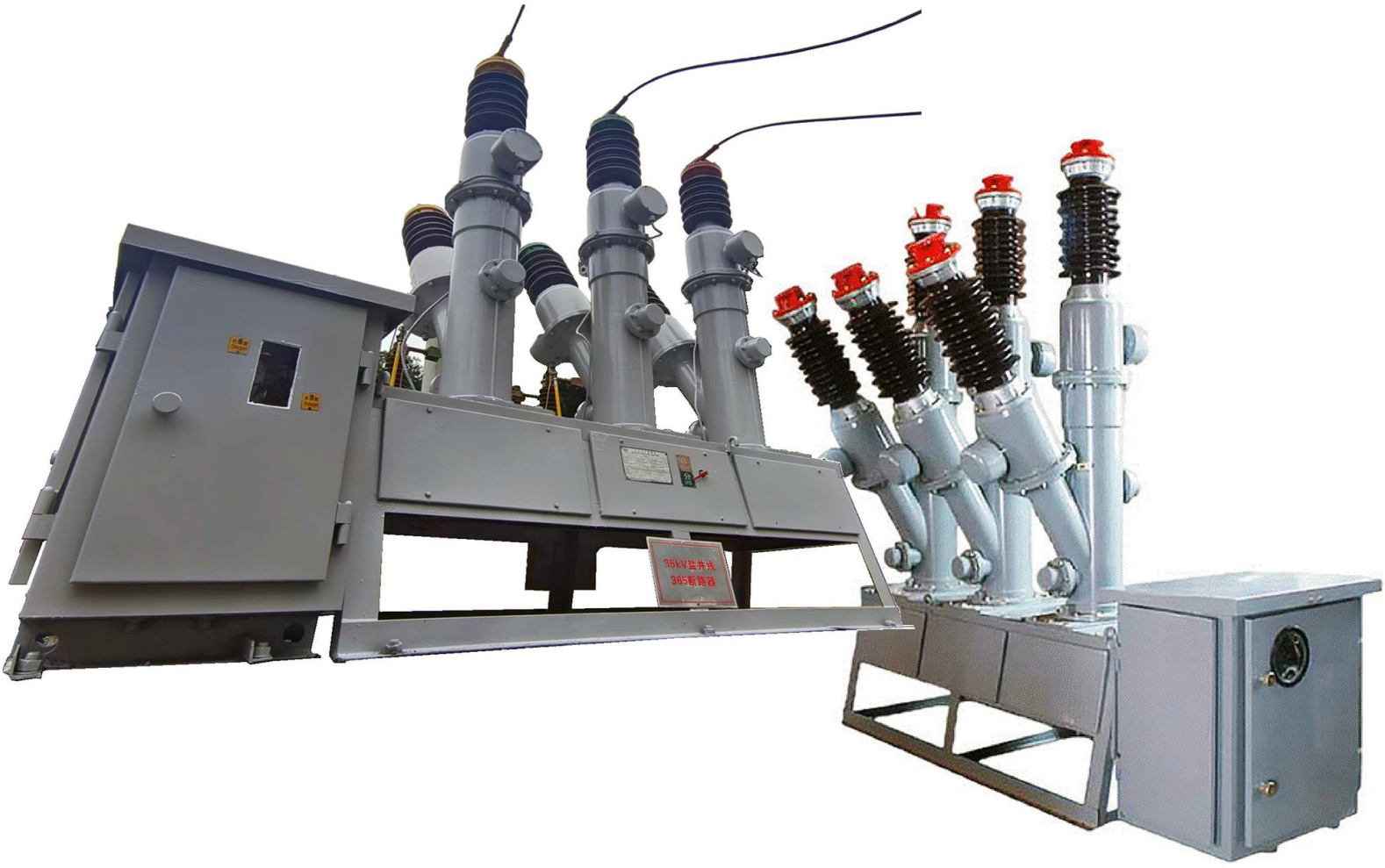

登高电气有限公司
DENGGAO ELECTRIC CO.,LTD.

LW8 SULPHUR HEXAFLUORIDE (SF6) CIRCUIT BREAKER

1. SUMMARY

LW8-40.5 outdoor high-voltage Sulphur Hexafluoride Circuit Breaker (hereinafter referred to as "circuit breaker") is outdoor electrical equipment with three-phase AC 50Hz, which is applicable to the control and protection of 35kV Power Transmission and distribution system and can also be used to connect circuit breakers and switch capacitor banks.

LW8 - 40.5 Circuit Breaker is equipped with CT T14 spring operating mechanism.

The circuit breaker meets the requirements of GB / T 1984-89 AC high voltage circuit breaker and IEC publication high voltage AC circuit breaker.

2. MODEL AND MEANING

L W 8 – 40.5 (W) / T □ - □

- Rated Short-Circuit Breaking Current
- Rated Current
- Spring Operating Mechanism
- Anti-fouling
- Rated Voltage
- Design Serial Number
- Outdoor
- Sf6 Circuit Breaker

LW8 SULPHUR HEXAFLUORIDE (SF6) CIRCUIT BREAKER

3. USAGE: ENVIRONMENTAL CONDITIONS

1. Altitude: ≤ 1000 m. If the altitude is higher than 1000m, the rated insulation level shall be corrected.
2. Ambient air temperature: maximum 40 ℃, minimum - 25 ℃, daily temperature difference 25k
3. Temperature: daily average relative humidity ≤ 95%, monthly average relative humidity ≤ 90%
4. Sunshine intensity: 0.1W/cm^2
5. Icing thickness: not more than 10mm
6. Resistance to floor drain: horizontal acceleration 0.3g, vertical acceleration 0.2g
7. Outdoor Wind speed (Wind pressure): 34m/s (700Pa)
8. Pollution level: e-level

4. MAIN ADVANTAGES

1. SF6 gas arc extinguishing and insulation, excellent insulation performance;
2. Simple structure, long maintenance cycle;
3. Strong breaking capacity and long mechanical life;
4. Either built-in or external current transformer, with high measurement accuracy;
5. Built-in intelligent wet temperature controller to ensure the safe and reliable operation of the circuit breaker in cold regions;
6. The overall sealing design of the shell is improved to effectively prevent the adverse effects of sandstorms and other bad weather on the circuit breaker.

LW8 SULPHUR HEXAFLUORIDE (SF6) CIRCUIT BREAKER

5. TECHNICAL PARAMETER TABLE

No.	Item		Unit	Parameters	
1	Rated Frequency		Hz	50 / 60	
2	Rated Voltage		kV	40.5	
3	Rated Breaking Current		A	1600	2000
4	Rated Insulation Level	Lightning Impulse Withstand Voltage (full-wave Peak Value)	kV	185 / 215 (Fracture)	
		Power Frequency Withstand Voltage (1min)		95	
5	SF6 Gas Rated Pressure (Gauge Pressure at 20 ℃)		MPa	0.45	
6	Locked Pressure (Gauge Pressure at 20 ℃)		MPa	0.45	
7	Minimum Operating Ambient Temperature		℃	-30	
8	Rated Short-Circuit Breaking Current		kA	25, 31.5	
9	Rated Short-Circuit Closing Current (Peak value)			63, 80	
10	Rated Short-Time Withstand Current (Thermal Stable Current)			25, 31.5	
11	Rated Peak Value Withstand Current (Strive to Stabilize the Current)			63, 80	
12	Rated Out of Step Breaking Current			63, 80	
13	Rated Short-Circuit Continuous Times		Times	4	
14	Closing – Opening Time		S	≤ 0.1	
15	Opening – Closing Time			≤ 0.1	
16	Rated Operating Order			O – 0.3s – CO – 180s - CO	
17	Rated Opening and Closing Current of Single Capacitor Bank		A	400	
18	Under Rated Short-Circuit Breaking Current's Cumulative Breaking Times		Times	15, 10	
19	Annual Leakage Gas		% year	≤ 1	
20	SF6 Gas Moisture content (20°C)		PPm	≤ 50	
21	Rated Operating Voltage of CT14 Spring Operating Mechanism		V	220V	
	Closing Coil, Opening Coil Voltage			AC220, DC110, 220	
	Voltage of Energy Storage Motor			AC220, DC220	
22	SF6 Gas Weight		Kg	8	
23	Circuit Breaker (Including Operating Mechanism) Weight			1400	
If the altitude is over 1000m, the rated insulation level should be modified as appropriate					

LW8 SULPHUR HEXAFLUORIDE (SF6) CIRCUIT BREAKER

6. OUTLINE AND INSTALLATION DIMENSION

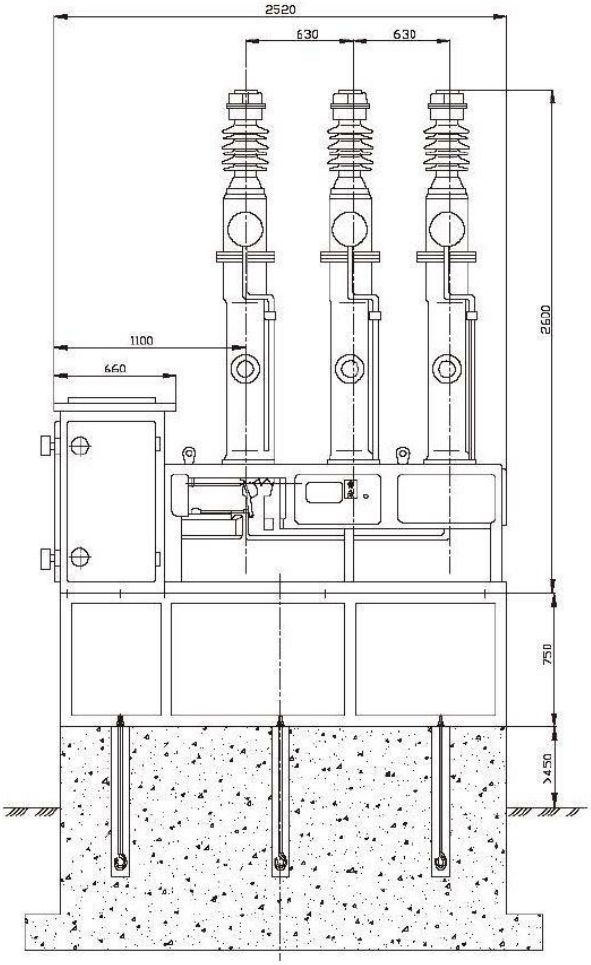

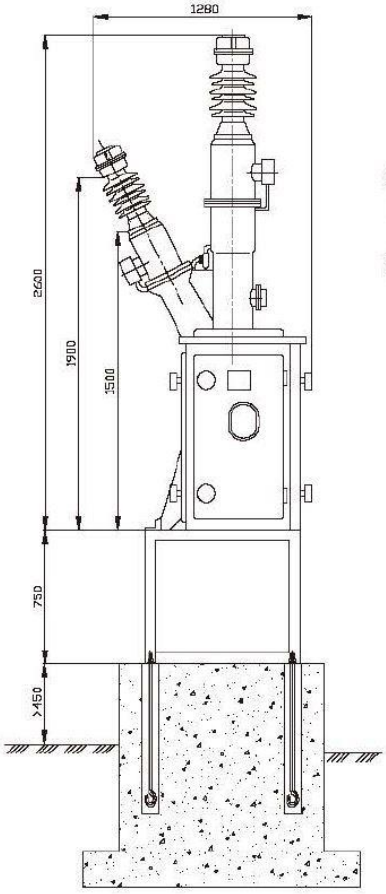

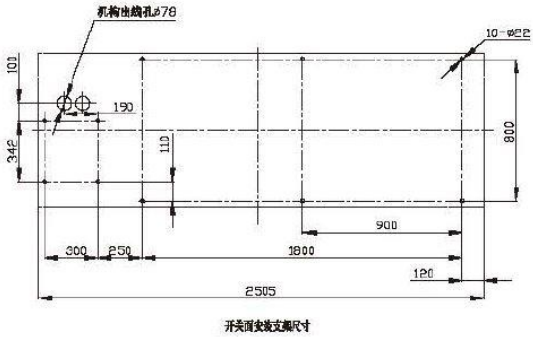

开关面安装支架尺寸

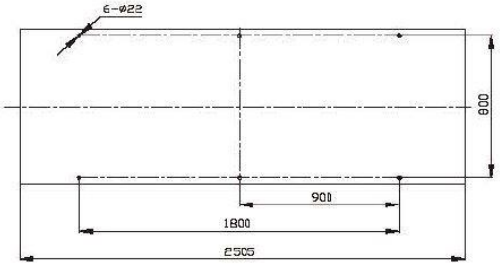

混凝土基础预埋安装支架尺寸

© DENGGAO ELECTRIC CO. LTD; ALL RIGHTS RESERVED

登高电气有限公司
DENGGAO ELECTRIC CO.,LTD.
HEADQUATERS: NO. 208 WEI WU ROAD, ECONOMIC DEVELOPMENT ZONE, YUEQING-WENZHOU, ZHEJIANG-CHINA
PHONE NUMBER: 0086-577-57576678
EMAIL ADDRESS: sale@dggpower.com

DGG 登高