DGG

BROCHURE / CATALOG >>>>>

https://www.dggpower.com

DGG 登高

DGG 登高

ZW20 – 12

BOUNDARY VACUUM CIRCUIT BREAKER

OUTDOOR / THREE-PHASE / HIGH-VOLTAGE

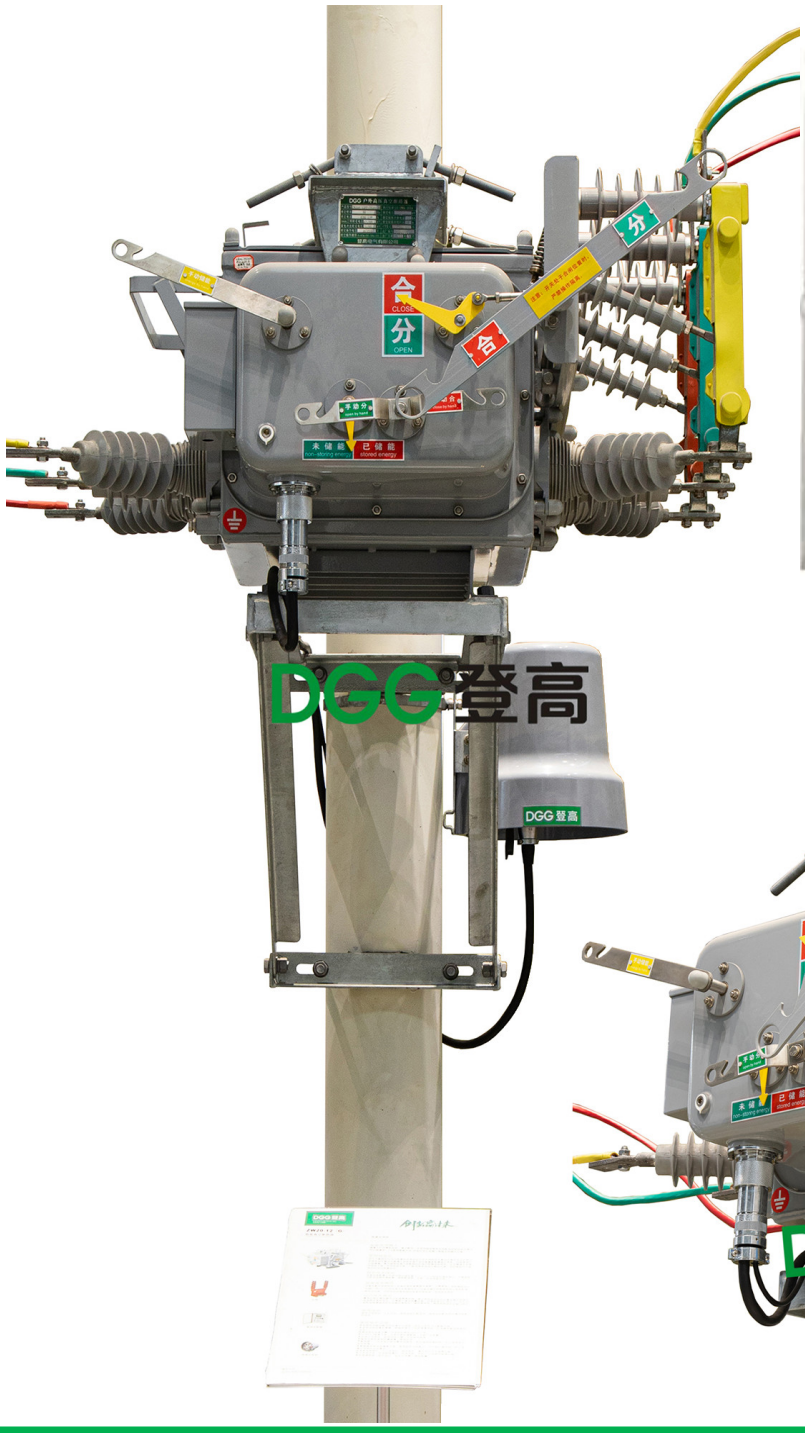



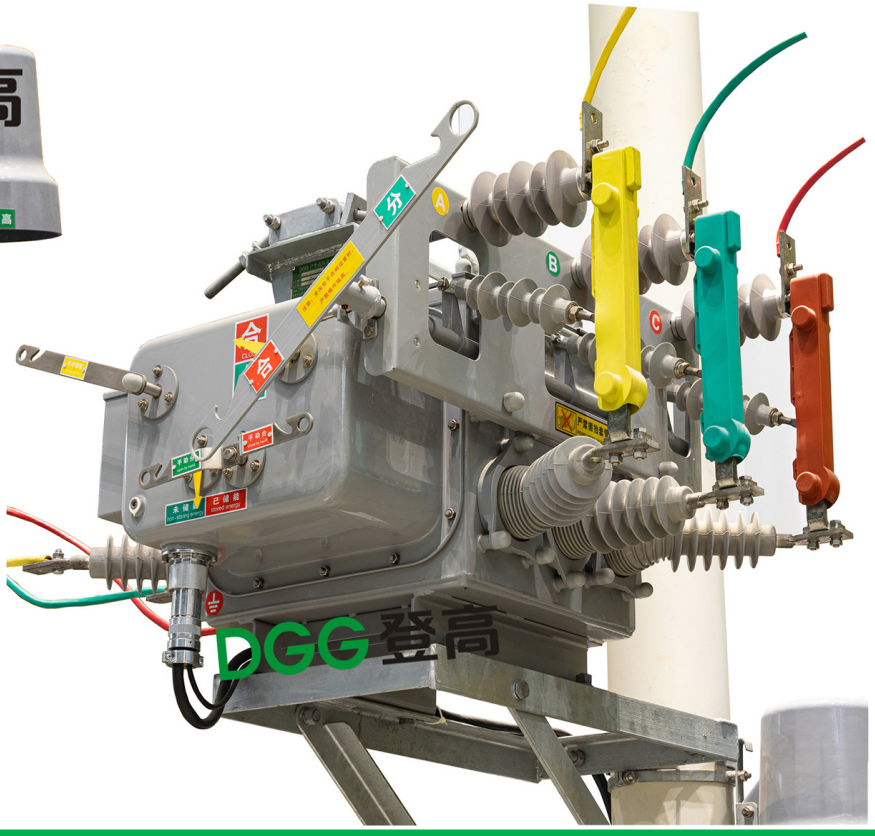

登高电气有限公司
DENGGAO ELECTRIC CO.,LTD.

ZW20 OUTDOOR BOUNDARY VACUUM CIRCUIT BREAKER

1. SUMMARY

ZW20-12F series outdoor high-voltage AC boundary vacuum circuit breaker (hereinafter referred to as "Boundary circuit breaker") is an outdoor high-voltage switchgear with three-phase AC 50Hz and a rated voltage of 12kV. It is mainly composed of a vacuum circuit breaker body, distribution automation feeder terminal, voltage transformer, control cable, etc. the circuit breaker body is equipped with a vacuum arc extinguishing chamber, current transformer, zero sequence current transformer, and other components.

Boundary circuit breakers have remote management mode, and the protection control function and communication function can be reliably judged, and the detection is used in substations, industrial and mining enterprises, and urban and rural power grids for control and protection. It is especially suitable for places requiring frequent operation and urban milliampere zero sequence current and phase-to-phase fault short-circuit current, so as to realize automatic removal of single-phase grounding fault and phase-to-phase short-circuit fault.

Boundary circuit breakers adopt vacuum arc extinguishing chamber and SF6 gas insulation. The box adopts foreign advanced gas sealing, explosion-proof, and insulation structure technology, with excellent overall sealing performance. Its spring operating mechanism adopts a miniaturized design, and excellent performance and action reliability are much higher than the domestic traditional spring operating mechanism.

The boundary circuit breaker shall comply with GB / T 1984-2014 high voltage current circuit breaker, DL / T 402 - 2016 high voltage current circuit breaker, DL / T 403 - 2000 technical conditions for ordering 12kV - 40.5kV high voltage vacuum circuit breaker, DL / T 721 - 2013 remote terminal of distribution automation system and other technical standards

ZW20 OUTDOOR BOUNDARY VACUUM CIRCUIT BREAKER

2. MODEL AND MEANING

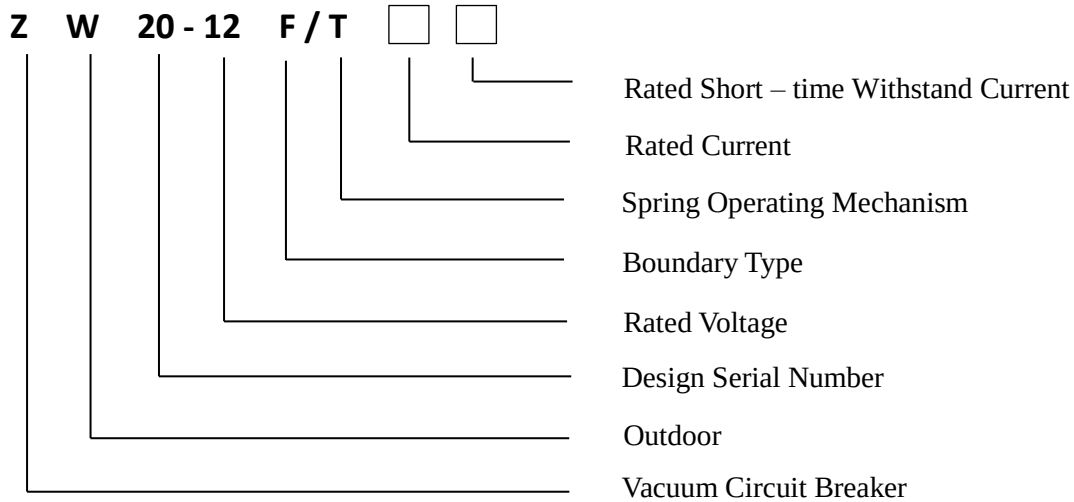

3. USAGE: ENVIRONMENTAL CONDITIONS

1. Altitude: ≤ 1000 m. If the altitude is higher than 1000m, the rated insulation level shall be corrected.
2. Ambient air temperature: maximum 40 ℃, minimum - 25 ℃, daily temperature difference 25k
3. Temperature: daily average relative humidity ≤ 95%, monthly average relative humidity ≤ 90%
4. Sunshine intensity: 0.1W/cm^2
5. Icing thickness: not more than 10mm
6. Resistance to floor drain: horizontal acceleration 0.3g, vertical acceleration 0.2g
7. Outdoor Wind speed (Wind pressure): 35m/s (700Pa)
8. Pollution level: e-level

4. MAIN ADVANTAGES

1. Matching with smart grid: It can realize three-stage protection, zero-sequence grounding protection, reclosing, and remote communication functions.
2. Flexible and convenient operation: it can store electric energy, open and close electrically, or store energy manually, open and close manually, and can operate at close range.
3. Low operating power and high reliability: The operating power (about 30W) of the newly designed miniaturized spring operating mechanism is reduced to the lowest level.
4. Reliable sealing performance: SF6 gas pressure is zero gauge pressure, and mature sealing structure technology is adopted, which has reliable sealing performance and is not easy to leak.
5. Unique way of entering and exiting: Uses silicone rubber sleeve, the insulation distance between the terminals is sufficient, and the external insulation performance is excellent.
6. Excellent safety performance: There is an explosion-proof device on the top of the box; even if there is an internal failure, there will be no leakage of high-temperature gas or splashes.
7. Flexible installation method: it can be installed on the pole or by sitting.
8. The rated current is large, up to 1250A, and the breaking capacity is strong, up to 25kA.

ZW20 OUTDOOR BOUNDARY VACUUM CIRCUIT BREAKER

5. TECHNICAL PARAMETER TABLE

No.	Item		Unit	Parameters	
1	Rated Frequency		Hz	50 / 60	
2	Rated Voltage		kV	12	
3	Rated Breaking Current		A	630	1250
4	Rated Short-time Power Frequency Withstand Voltage	Phase, To Earth (Wet)	kV / min	34 / 1	
		Phase, To Earth (Dry)		42 / 1	
		Fracture (Dry)		48 / 1	
		Secondary Circuit to Earth		2 / 1	
5	Lightning Impulse Withstand Voltage	Phase, To Earth	kV	75	
		Fracture		85	
6	Rated Short-Circuit Breaking Current (Effective value)		kA	20	25
7	Rated Short-Circuit Closing Current (Peak value)			50	63
8	Rated Short-Time Withstand Current and Continuous time		kA/s	20/4	25/4
9	Rated Peak Value Withstand Current		kA	50	63
10	Rated Short-Circuit Breaking Current Breaking Times		Times	30 (E2 Level)	
11	SF6 Gas Rated Gauge		MPa	0	
12	Main Circuit Resistance		μΩ	≤ 120	
13	Rated Operating Voltage and Auxiliary(Control) Circuit Rated Voltage		V	AC/DC220, DC48, DC24	
14	Mechanical Life Span		Times	10000 (M2 Level)	
If the altitude is over 1000m, the rated insulation level should be modified as appropriate					

Note: If the parameters requested by the user are beyond the scope of the above table, they can be determined after consultation with our company.

ZW20 OUTDOOR BOUNDARY VACUUM CIRCUIT BREAKER

6. OUTLINE AND INSTALLATION DIMENSIONS

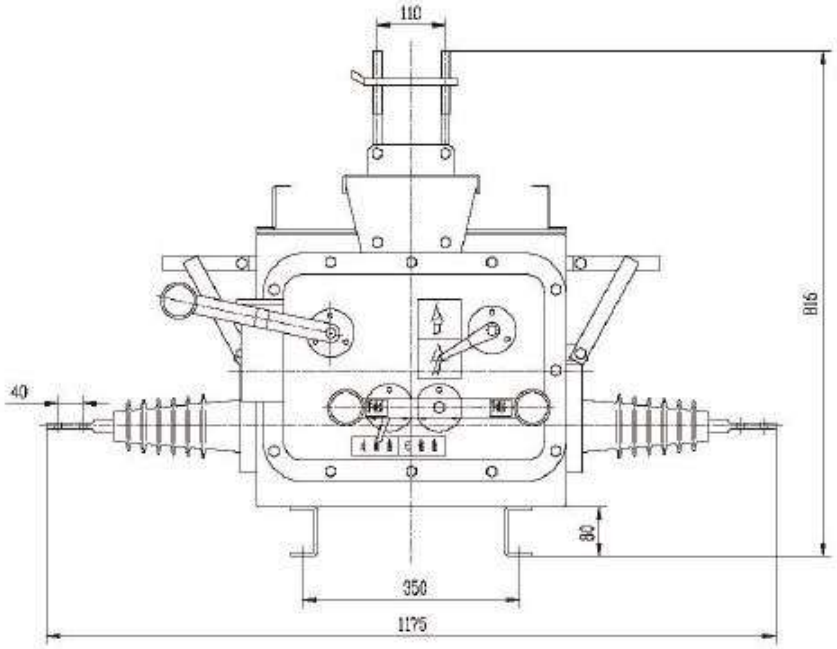

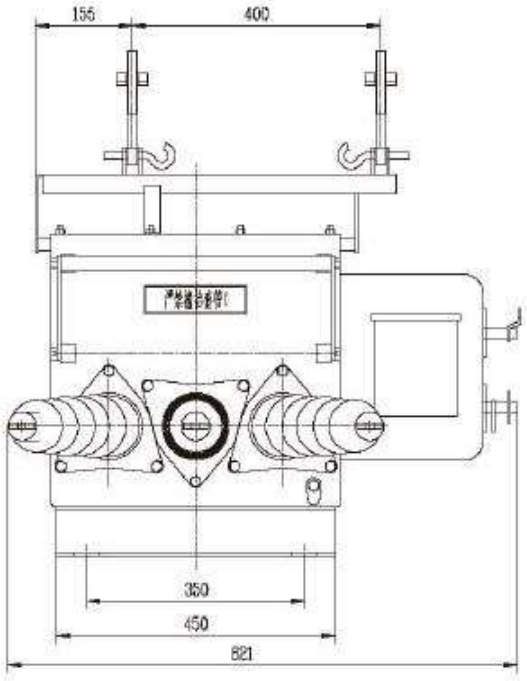

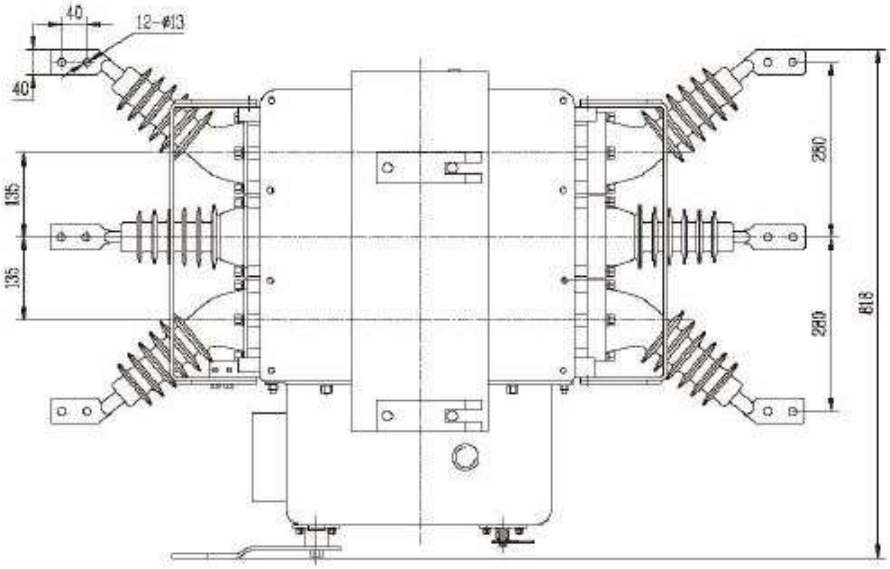

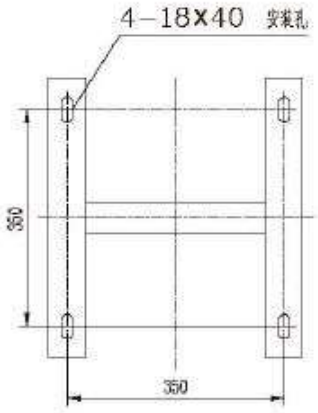

断路器底座安装尺寸图

© DENGGAO ELECTRIC CO. LTD; ALL RIGHTS RESERVED

登高电气有限公司
DENGGAO ELECTRIC CO.,LTD.
HEADQUATERS: NO. 208 WEI WU ROAD, ECONOMIC DEVELOPMENT ZONE, YUEQING-WENZHOU, ZHEJIANG-CHINA
PHONE NUMBER: 0086-577-57576678
EMAIL ADDRESS: sale@dggpower.com

DGG 登高