DGG

BROCHURE / CATALOG >>>>>

https://www.dggpower.com

DGG 登高

DGG 登高

ZW32 – 12

INTELLIGENT VACUUM CIRCUIT BREAKER

OUTDOOR / THREE-PHASE / HIGH-VOLTAGE



登高电气有限公司
DENGGAO ELECTRIC CO.,LTD.

ZW32 OUTDOOR INTELLIGENT VACUUM CIRCUIT BREAKER

1. SUMMARY

ZW32 - 12(G) • / T Type Intelligent Outdoor High Voltage AC Vacuum Circuit Breaker (Hereinafter referred to as "Intelligent Circuit Breaker"), is an outdoor high voltage distribution switch(switchgear) equipment with 12kV rated voltage, 50Hz 3-phase AC, which is mainly used to disconnect, close electric systems load current, overload current and short-circuit current. It is suitable for use in substations and Industrial and Mining Enterprise distribution systems for protection and control. It can also be used in places requiring frequent operation such as rural power grids.

Intelligent Circuit Breakers conform to the technical standards of High Voltage AC Circuit Breaker (GB/T 1984-2014), High voltage AC Circuit Breaker (DL/T 402-2016), technical conditions for ordering 12kV ~ 40.5kV High voltage vacuum circuit breaker (DL/T 403-2000) and a remote terminal for Distribution Automated system (DL/T 721-2013), etc.

2. MODEL AND MEANING

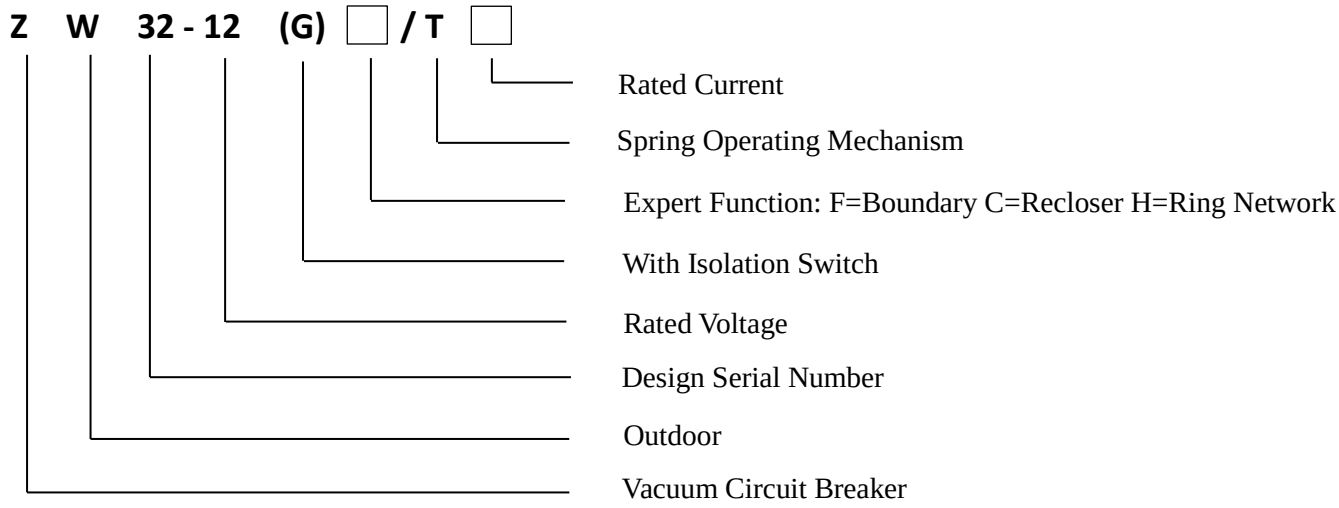

ZW32 OUTDOOR INTELLIGENT VACUUM CIRCUIT BREAKER

3. USAGE: ENVIRONMENTAL CONDITIONS

1. Altitude: ≤ 1000 m. If the altitude is higher than 1000m, the rated insulation level shall be corrected.
2. Ambient air temperature: maximum 40 ℃, minimum - 25 ℃, daily temperature difference 25k
3. Temperature: daily average relative humidity ≤ 95%, monthly average relative humidity ≤ 90%
4. Sunshine intensity: 0.1W/cm^2
5. Icing thickness: not more than 10mm
6. Resistance to floor drain: horizontal acceleration 0.3g, vertical acceleration 0.2g
7. Outdoor Wind speed (Wind pressure): 34m/s (700Pa)
8. Pollution level: e-level

4. MAIN ADVANTAGES

1. The overall structure is a three-phase pillar type, and the shell has good sealing performance.
2. The shell (box) adopts SUS304 non-magnetic stainless steel, which is precisely welded and polished by an imported argon arc welding machine. It has a beautiful appearance and will never rust.
3. The vacuum interrupter is connected to the operating mechanism through an insulating pull rod, with stable and reliable performance.
4. The vacuum interrupter, main electric circuit, insulation support, and other parts are poured into an organic whole by APG process with epoxy resin and encapsulated with silicone rubber, which has good anti-condensation performance and mechanical strength.
5. It adopts a high-performance miniaturized spring operating mechanism, which has a simple structure and long mechanical life and has the functions of electric, manual energy storage, and opening, and closing operation.
6. The utility model has the advantages of a novel structure, small volume, lightweight and convenient installation.
7. It can realize the functions of three-stage protection, zero sequence grounding protection, reclosing, and remote communication.

ZW32 OUTDOOR INTELLIGENT VACUUM CIRCUIT BREAKER

5. TECHNICAL PARAMETER TABLE

No.	Item		Unit	Parameters	
1	Rated Frequency		Hz	50 / 60	
2	Rated Voltage		kV	12	
3	Rated Breaking Current		A	630	1250
4	Rated Short-time Power Frequency Withstand Voltage	Phase, To Earth (Wet)	kV / min	34 / 1	
		Phase, To Earth (Dry)		42 / 1	
		Fracture (Dry)		48 / 1	
		Secondary Circuit to Earth		2 / 1	
5	Lightning Impulse Withstand Voltage	Phase, To Earth	kV	75	
		Fracture		85	
6	Rated Short-Circuit Withstand Current and Duration		kA/s	20/4	25/4
7	Rated Short-Circuit Breaking Current (Effective value)		kA	20	35
8	Rated Short-Time Making Current (Peak Value)			50	63
9	Rated Peak Value Withstand Current			50	63
10	Rated Short-Circuit Breaking Current Breaking Times		Times	30	
11	Rated Operating Voltage & Auxiliary (Control) Circuit Rated Voltage		V	AC/DC220, DC48, DC24	
12	Main Circuit Resistance	Without Isolation Switch	μΩ	≤ 120	
		With Isolation Switch			
13	Mechanical Life Span		Times	10000	
If the altitude is over 1000m, the rated insulation level should be modified as appropriate					

Note: If the parameters requested by the user are beyond the scope of the above table, they can be determined after consultation with our company.

ZW32 OUTDOOR INTELLIGENT VACUUM CIRCUIT BREAKER

6. OUTLINE AND INSTALLATION DIMENSIONS

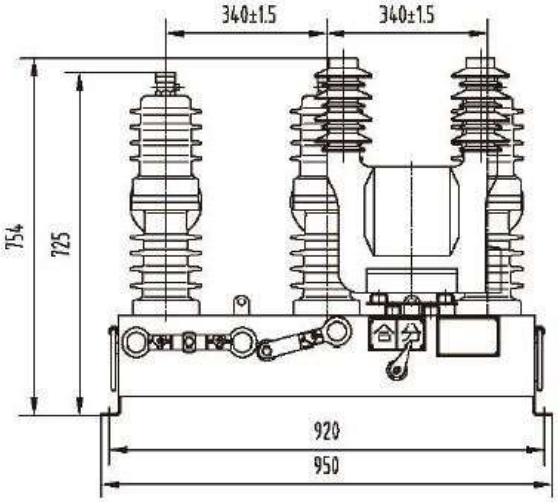

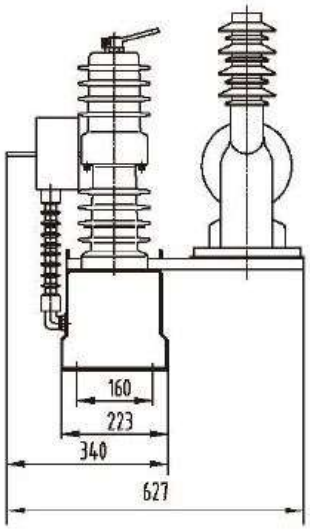

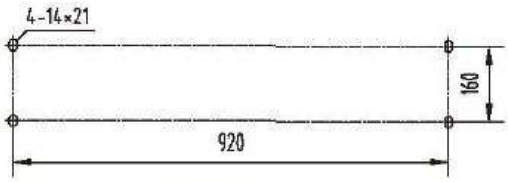

底座安装孔尺寸

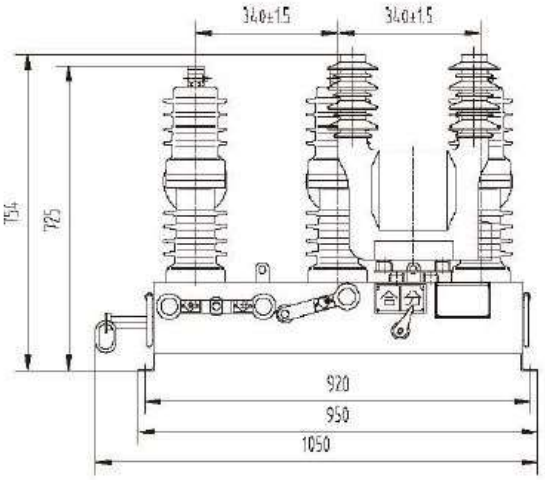

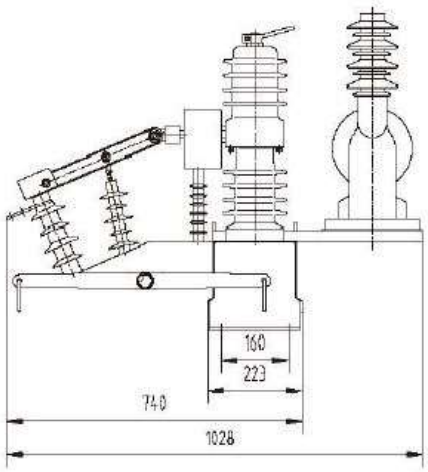

© DENGGAO ELECTRIC CO. LTD; ALL RIGHTS RESERVED

登高电气有限公司
DENGGAO ELECTRIC CO.,LTD.
HEADQUATERS: NO. 208 WEI WU ROAD, ECONOMIC DEVELOPMENT ZONE, YUEQING-WENZHOU, ZHEJIANG-CHINA
PHONE NUMBER: 0086-577-57576678
EMAIL ADDRESS: sale@dggpower.com

DGG 登高