DGG

BROCHURE / CATALOG >>>>>

https://www.dggpower.com

DGG 登高

DGG 登高

ZW43 – 12

INTELLIGENT VACUUM CIRCUIT BREAKER

OUTDOOR / THREE-PHASE / HIGH-VOLTAGE





登高电气有限公司
DENGGAO ELECTRIC CO.,LTD.

ZW43 OUTDOOR INTELLIGENT VACUUM CIRCUIT BREAKER

1. SUMMARY

ZW43-12 series intelligent outdoor high-voltage AC vacuum circuit breaker (hereinafter referred to as "intelligent circuit breaker"), which is an outdoor power distribution switchgear with a rated voltage of 12kV and three-phase AC 50Hz, mainly consists of ZW43-12 outdoor high-voltage AC vacuum circuit breaker body, DK series distribution automation feeder terminal, external voltage transformer, and control cable, etc. Arrester, single-side disconnector, or double-side disconnector can be installed according to user needs.

ZW43-12C outdoor high-voltage AC vacuum recloser has overload and short circuit protection, quick break protection, definite time-delay protection, and automatic recloser functions, effectively ensuring the good operation of the line.

ZW43-12F outdoor high-voltage AC boundary vacuum circuit breaker has a remote management mode, protection control function, and communication function, which can be reliably judged. The detection boundary is used for control and protection in substations, industrial and mining enterprises, and urban and rural power grids. It is especially suitable for places requiring frequent operation and urban milliampere zero sequence current and interphase fault short circuit current, which can automatically remove single-phase ground fault and interphase short circuit fault.

The intelligent circuit breaker complies with the technical standards such as High Voltage AC Circuit Breaker (GB/T1984-2014), High Voltage AC Circuit Breaker (DL/T402-2016), Technical Conditions for Ordering 12kV~40.5kV High Voltage Vacuum Circuit Breaker (DL/T403-2000) and Remote Terminal of Distribution Automation System (DL/T721-2013).

ZW43 OUTDOOR INTELLIGENT VACUUM CIRCUIT BREAKER

2. MODEL AND MEANING

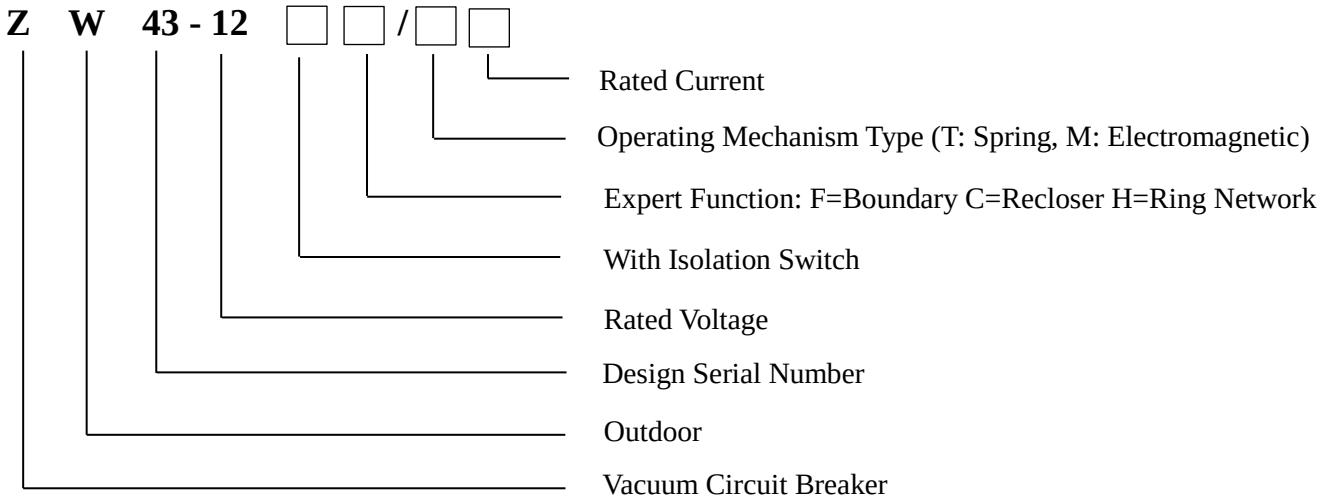

3. USAGE: ENVIRONMENTAL CONDITIONS

1. Altitude: ≤ 1000 m. If the altitude is higher than 1000m, the rated insulation level shall be corrected.
2. Ambient air temperature: maximum 40 ℃, minimum - 25 ℃, daily temperature difference 25k
3. Temperature: daily average relative humidity ≤ 95%, monthly average relative humidity ≤ 90%
4. Sunshine intensity: 0.1W/cm^2
5. Icing thickness: not more than 10mm
6. Resistance to floor drain: horizontal acceleration 0.3g, vertical acceleration 0.2g
7. Outdoor Wind speed (Wind pressure): 34m/s (700Pa)
8. Pollution level: e-level

4. MAIN ADVANTAGES

1. The overall structure is a three-phase pillar structure, which adopts APG solid sealing pole technology, with good sealing performance and good anti-condensation performance.
2. It can be equipped with bilateral disconnectors to make the maintenance of circuits and electrical equipment safer.
3. It adopts a miniaturized design, small volume, is lightweight, maintenance-free, and long service life.
4. The operating mechanism has a novel design, simple structure, and reliable action.
5. It can realize three-stage protection, zero sequence grounding protection, reclosing, and remote communication functionalities.

ZW43 OUTDOOR INTELLIGENT VACUUM CIRCUIT BREAKER

5. TECHNICAL PARAMETER TABLE

No.	Item		Unit	Parameters	
1	Rated Frequency		Hz	50 / 60	
2	Rated Voltage		kV	12	
3	Rated Breaking Current		A	630	1250
4	Rated Short-time Power Frequency Withstand Voltage	Phase, To Earth (Wet)	kV / min	42 / 1	
		Phase, To Earth (Dry)		48 / 1	
		Fracture (Dry)		34 / 1	
		Secondary Circuit to Earth		2 / 1	
5	Lightning Impulse Withstand Voltage	Phase, To Earth	kV	75	
		Fracture		85	
6	Rated Short-Circuit Breaking Current		kA	20	25
7	Rated Short-Circuit Closing Current (Peak value)			50	63
8	Rated Short-Time Withstand Current and Continuous Time		kA/s	20/4	25/5
9	Rated Peak Value Withstand Current		kA	50	63
10	Rated Short-Circuit Breaking Current Breaking Times		Times	30	
11	Rated Operating Voltage & Auxiliary (Control) Circuit Rated Voltage		V	AC/DC220, DC48, DC24	
12	Main Circuit Resistance	Without Isolation Switch	μΩ	≤ 80	
		With Single Isolation Switch		≤ 120	
		With Double Isolation Switch		≤ 160	
13	Mechanical Life Span		Times	10000	
If the altitude is over 1000m, the rated insulation level should be modified as appropriate					

Note: If the parameters requested by the user are beyond the scope of the above table, they can be determined after consultation with our company.

ZW43 OUTDOOR INTELLIGENT VACUUM CIRCUIT BREAKER

6. OUTLINE AND INSTALLATION DIMENSIONS

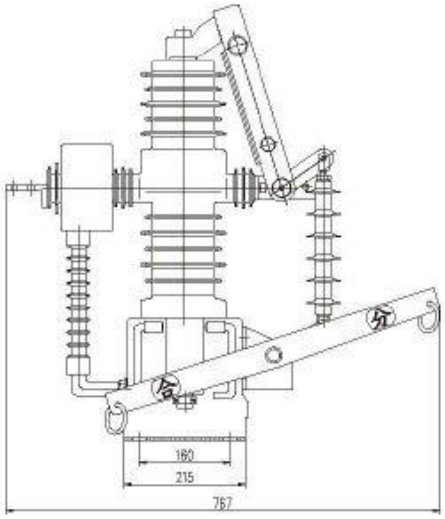

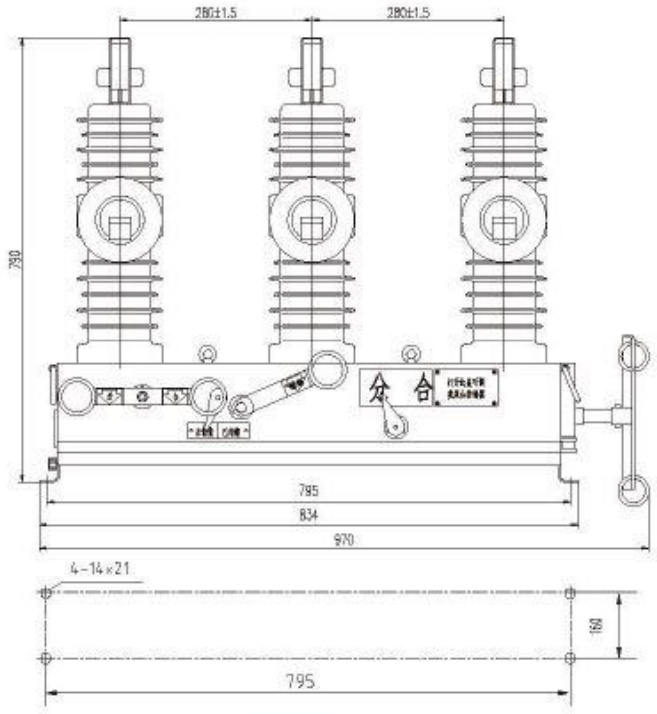

底座安装孔尺寸

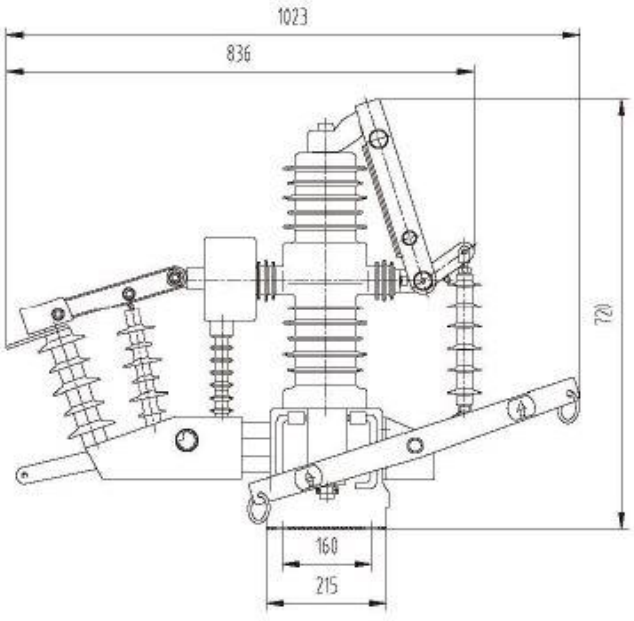

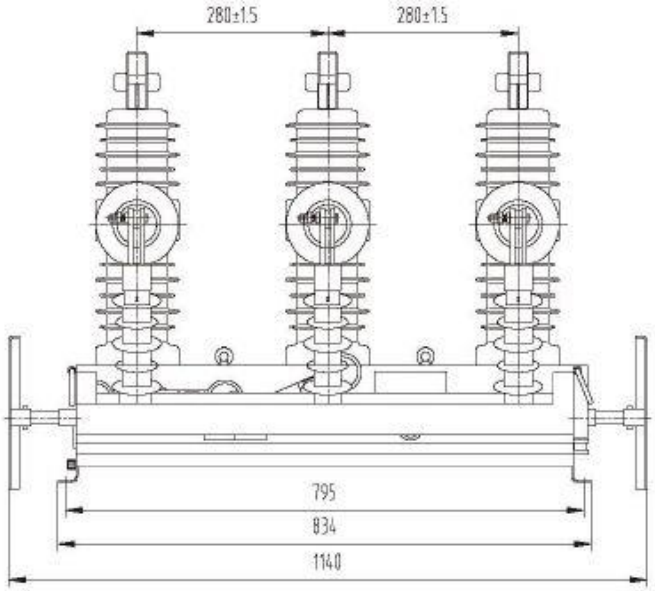

© DENGGAO ELECTRIC CO. LTD; ALL RIGHTS RESERVED

登高电气有限公司
DENGGAO ELECTRIC CO.,LTD.
HEADQUATERS: NO. 208 WEI WU ROAD, ECONOMIC DEVELOPMENT ZONE, YUEQING-WENZHOU, ZHEJIANG-CHINA
PHONE NUMBER: 0086-577-57576678
EMAIL ADDRESS: sale@dggpower.com

DGG 登高